SAMSUNG

GSM TELEPHONE

SGH-i450

SERVICE Manual

GSM TELEPHONE

CONTENTS

1. Safety Precautions
2. Specification
3. Product Function
4. Array course control
5. Exploded View and Parts List
6. Main Electrical Parts List
7. Block Diagrams
8. PCB Diagrams
9. Flow Chart of Troubleshooting
10. Reference data
11. Disassembly and Assembly Instructions

SAMSUNG ELECTRONICS

GSPN (Global Service Partner Network)

Country	Web Site
North America	service.samsungportal.com
Latin America	latin.samsungportal.com
CIS	cis.samsungportal.com
Europe	europe.samsungportal.com
China	china.samsungportal.com
Asia	asia.samsungportal.com
Mideast & Africa	mea.samsungportal.com

This Service Manual is a property of Samsung Electronics Co.,Ltd.
Any unauthorized use of Manual can be punished under applicable International and/or domestic law.

© Samsung Electronics Co.,Ltd.

2007. 10. Rev.1.0

1. Safety Precautions

1-1. Repair Precaution

- Repair in Shield Box, during detailed tuning.
  Take specially care of tuning or test, because the specification of cellular phone is sensitive for surrounding interference(RF noise).

- Be careful to use a kind of magnetic object or tool, because performance of parts is damaged by the influence of magnetic force.

- Surely use a standard screwdriver when you disassemble this product, otherwise screw will be worn away.

- Use a thicken twisted wire when you measure level.
  A thicken twisted wire has low resistance, therefore error of measurement is few.

- Repair after separate Test Pack and Set because for short danger (for example an overcurrent and furious flames of parts etc) when you repair board in condition of connecting Test Pack and tuning on.

- Take specially care of soldering, because Land of PCB is small and weak in heat.

- Surely tune on/off while using AC power plug, because a repair of battery charger is dangerous when tuning ON/OFF PBA and Connector after disassembling charger.

- Don't use as you pleases after change other material than replacement registered on SEC System. Otherwise engineer in charge isn't charged with problem that you don't keep this rules.

SAMSUNG Proprietary-Contents may change without notice
This Document can not be used without Samsung's authorization

1-2. ESD(Electrostatically Sensitive Devices) Precaution

Several semiconductor may be damaged easily by static electricity. Such parts are called by ESD (Electrostatically Sensitive Devices), for example IC,BGA chip etc. Read Precaution below. You can prevent from ESD damage by static electricity.

- Remove static electricity remained your body before you touch semiconductor or parts with semiconductor. There are ways that you touch an earthed place or wear static electricity prevention string on wrist.

- Use earthed soldering steel when you connect or disconnect ESD.

- Use soldering removing tool to break static electricity. , otherwise ESD will be damaged by static electricity.

- Don't unpack until you set up ESD on product. Because most of ESD are packed by box and aluminum
  plate to have conductive power,they are prevented from static electricity.

- You must maintain electric contact between ESD and place due to be set up until ESD is connected completely to the proper place or a circuit board.

SAMSUNG Proprietary-Contents may change without notice
This Document can not be used without Samsung's authorization

2. Specification

2-1. GSM General Specification

	EGSM 900	DCS 1800	PCS 1900	WCDMA 2100
Freq. Band[MHz] Uplink/Downlink	880~915 925~960	1710~1785 1805~1880	1850~1910 1930~1990	1920~1980 2110~2170
ARFCN range	0~124 & 975~1023	512~885	512~810	UL:9612~9888 DL:10562~10838
Tx/Rx spacing	10MHz	20MHz	20MHz	130MHz
Mod. Bit rate/ Bit Period	270.833kbps 3.692us	270.833kbps 3.692us	270.833kbps 3.692us	3.84Mcps (chip rate)
Time Slot Period/ Frame Period	576.9us 4.615ms	576.9us 4.615ms	576.9us 4.615ms	Frame length : 10ms Slot length : 0.667ms
Modulation	0.3GMSK	0.3GMSK	0.3GMSK	QPSK HPSK
MS Power	33dBm~5dBm	30dBm~0dBm	30dBm~0dBm	24dBm~-50dBm
Power Class	4 (max +33dBm)	1 (max +30dBm)	1 (max +30dBm)	3 (max +24dBm)
Sensitivity	-102dBm	-100dBm	-100dBm	-106.7dBm
TDMA Mux	8	8	8	
Cell Radius	35Km	2Km	2Km	2Km

SAMSUNG Proprietary-Contents may change without notice
This Document can not be used without Samsung's authorization

2-2. GSM TX power class

TX Power control level	GSM850 GSM900
5	33±2 dBm
6	31±2 dBm
7	29±2 dBm
8	27±2 dBm
9	25±2 dBm
10	23±2 dBm
11	21±2 dBm
12	19±2 dBm
13	17±2 dBm
14	15±2 dBm
15	13±2 dBm
16	11±3 dBm
17	9±3 dBm
18	7±3 dBm
19	5±3 dBm

TX Power control level	DCS1800
0	30±3 dBm
1	28±3 dBm
2	26±3 dBm
3	24±3 dBm
4	22±3 dBm
5	20±3 dBm
6	18±3 dBm
7	16±3 dBm
8	14±3 dBm
9	12±4 dBm
10	10±4 dBm
11	8±4 dBm
12	6±4 dBm
13	4±4 dBm
14	2±5 dBm
15	0±5 dBm

TX Power control level	PCS1900
0	30±3 dBm
1	28±3 dBm
2	26±3 dBm
3	24±3 dBm
4	22±3 dBm
5	20±3 dBm
6	18±3 dBm
7	16±3 dBm
8	14±3 dBm
9	12±4 dBm
10	10±4 dBm
11	8±4 dBm
12	6±4 dBm
13	4±4 dBm
14	2±5 dBm
15	0±5 dBm

SAMSUNG Proprietary-Contents may change without notice
This Document can not be used without Samsung's authorization

3. Product Function

Main Function

- HSDPA/UMTS, EDGE, GPRS
- Touch wheel interface for Music UI
- Bluetooth v2.0 + EDR
- USB v2.0 HS compatible
- Camera 2Mega x 16 Digital Zooming and camcorder
- FM Radio
- Instant Messaging capability
- E-mail
- Featured applications provide alarms, calendar, calculator, record audio, converter, timer, stopwatch, and world time.
- File viewer (MS office, PDF)
- Multimedia Message Service (MMS)
- Multimedia capability (with included Media player)
- Photo caller ID
- Speakerphone capability
- WEB/WAP browser (HTMS, xHTML, WML)

SAMSUNG Proprietary-Contents may change without notice
This Document can not be used without Samsung's authorization

SAMSUNG Proprietary-Contents may change without notice
This Document can not be used without Samsung's authorization

4. Array course control

4-1. Software Adjustments

- There is 2 set to download the binary image into your device.

[First set]

1. **JIG BOX (UMTS TEST JIG; GH80-03308A)**
2. **USB Cable : JIG to PC**
3. **Test Cable : JIG to Impulse (GH39-00890A)**
4. **Power Cable : JIG to power supply**
5. **Serial Cable : JIG to PC**
6. **Power Supply**
7. **Rf Cable : Impulse to Agilent 8960 or CMU200 (GH39-00397A)**

SAMSUNG Proprietary-Contents may change without notice
This Document can not be used without Samsung's authorization

[Second Set]

USB Data Link Cable : Impulse to PC (GH39-00922A)
Standard Battery for Impulse (GH43-02985A)

SAMSUNG Proprietary-Contents may change without notice
This Document can not be used without Samsung's authorization

4-2. Software Download

4-2-1. Pre-requisite for Download

SGH - i450 Mobile Device

Apollo v4.01.exe : Downloader Application for SGH-i450

USB Download Driver : SS60_Downloader_Driver.zip

Rom Image : PDA(*.IMG), MODEM(*.BIN) images

Equipment set for Download.

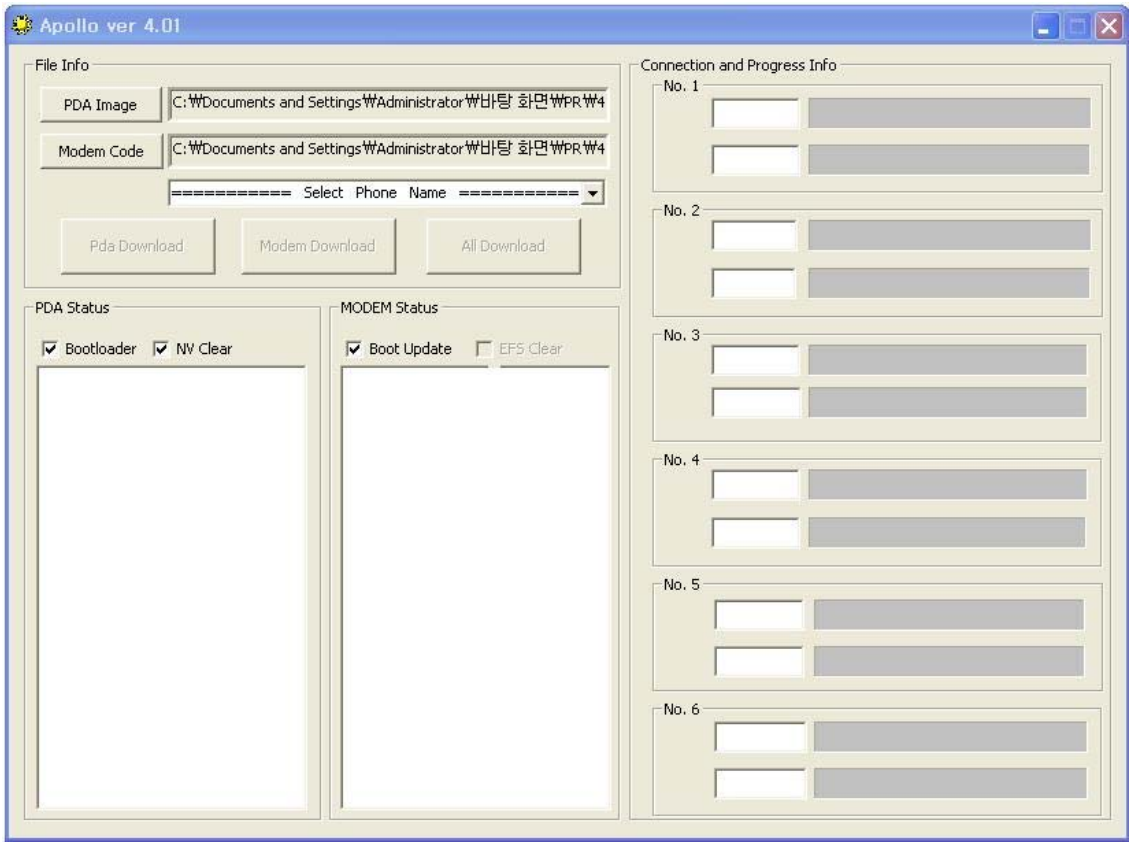

SAMSUNG Proprietary-Contents may change without notice
This Document can not be used without Samsung's authorization

4-2-2. Concupts & cautions.

You can download PDA or MODEM separately. But We are always recommended to download both at the same time using same version of rom image.

To download an image, the phone need to be set to a proper download mode.

There are 3 download modes.

PDA download : Hold 1, 4 keys and power on -> Blue screen with some information.

MODEM download : Hold 7, * keys and power on -> Blinking "MODEM DOWNLOAD" on blue screen

All download : Hold 4, 7 keys and power on -> Blinking "ALL DOWNLOAD" on blue screen

For PDA image download, the phone shows download progress on the screen

For MODEM image download, the phone shows RGBW/B Screen.

For All download mode, MODEM image is downloaded first and then PDA downloading starts.

After downloading PDA, the phone will be reboot.

Do NOT interrupt downloading process or the phone will be damaged. You would be unable to boot up the phone or to re-flash the phone. Let it finish downloading process even though you are flashing wrong images.

SAMSUNG Proprietary-Contents may change without notice
This Document can not be used without Samsung's authorization

4-2-3. USB Driver installation for PDA

Execution Apollo.exe.
SGH-i450 connect to the Host computer using download equipment set.
Hold “1+4” key and insert power supplied test cable when use equipment set 1 or Hold “1+4” key and press power on key when use equipment set 2.
Install PDA side driver.
Follow New H/W Installation Manager.
Select ‘IBootHostUSB.inf’file under ‘i450_Apollo_Drivers\PDA_driver’ folder when Windows asks for new h/w driver. It is safe to choose “Yes” for the waring window.
Confirm “SAMSUNG BlueFin USB Downloader” Installed.

Refer to Next Page.
** If Windows doesn’t ask for USB driver, it means USB driver installation was failed before. Open Hardware Manager then delete devices with?or!mark then try again. If it doesn’t work, you need to right click on the device then try Driver Update.
After installing PDA driver, Apollo shows the connection status if it is installed properly.

SAMSUNG Proprietary-Contents may change without notice
This Document can not be used without Samsung's authorization

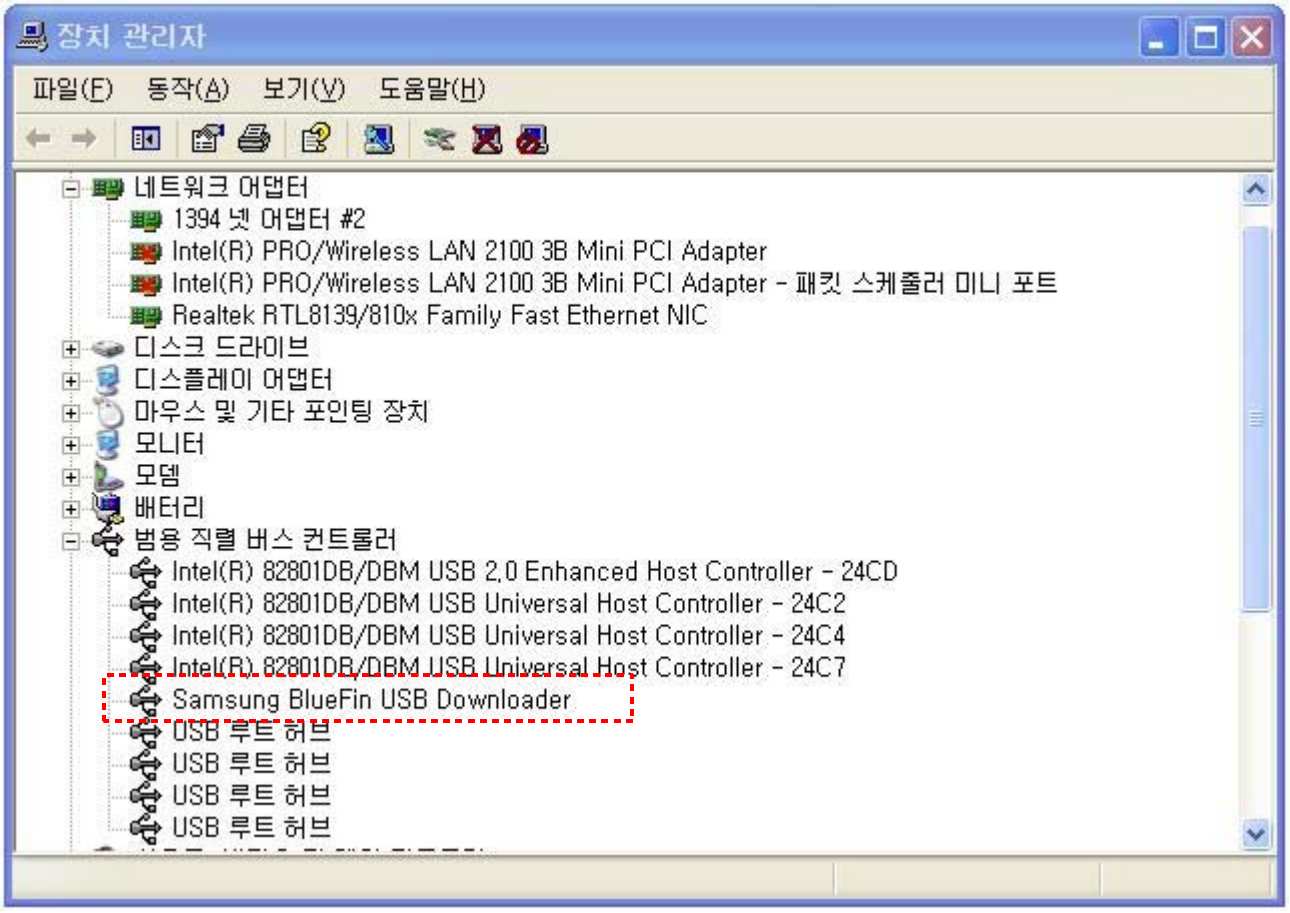

SAMSUNG Proprietary-Contents may change without notice
This Document can not be used without Samsung's authorization

4-2-4. USB Driver installation for MODEM

Hold “7 + *” key and insert power supplied test cable when use equipment set 1 or Hold “7+ *” key and press power on key when use equipment set 2.

Install Modem side driver.

Execute ‘Setup.exe’file under ‘i450_Apollo_Drivers\PHONE_driver’ folder when Windows asks for new h/w driver.

Confirm “SAMSUNG USB Composite Device” Installed.

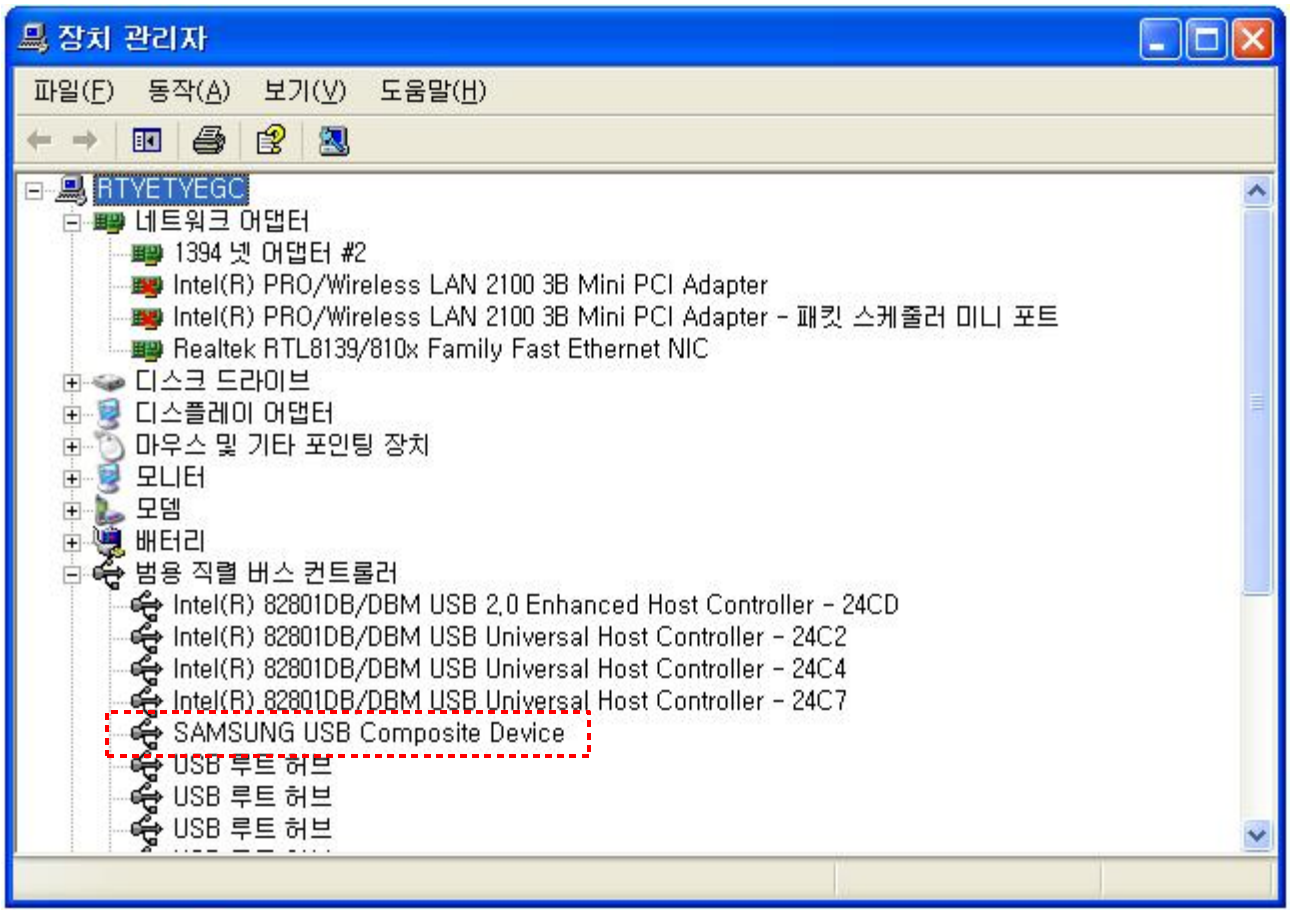

SAMSUNG Proprietary-Contents may change without notice
This Document can not be used without Samsung's authorization

4-2-5. USB Driver installation

1. After installing PDA driver, Apollo shows the connection status if it is installed properly.

2. After installing MODEM driver, Apollo shows the connection status if it is installed properly.

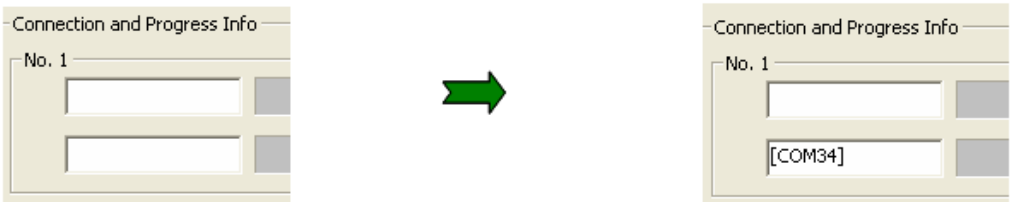

SAMSUNG Proprietary-Contents may change without notice
This Document can not be used without Samsung's authorization

4-2-6. Download the image using APOLLO

Execution Apollo.exe.

Select a Rom Image to download

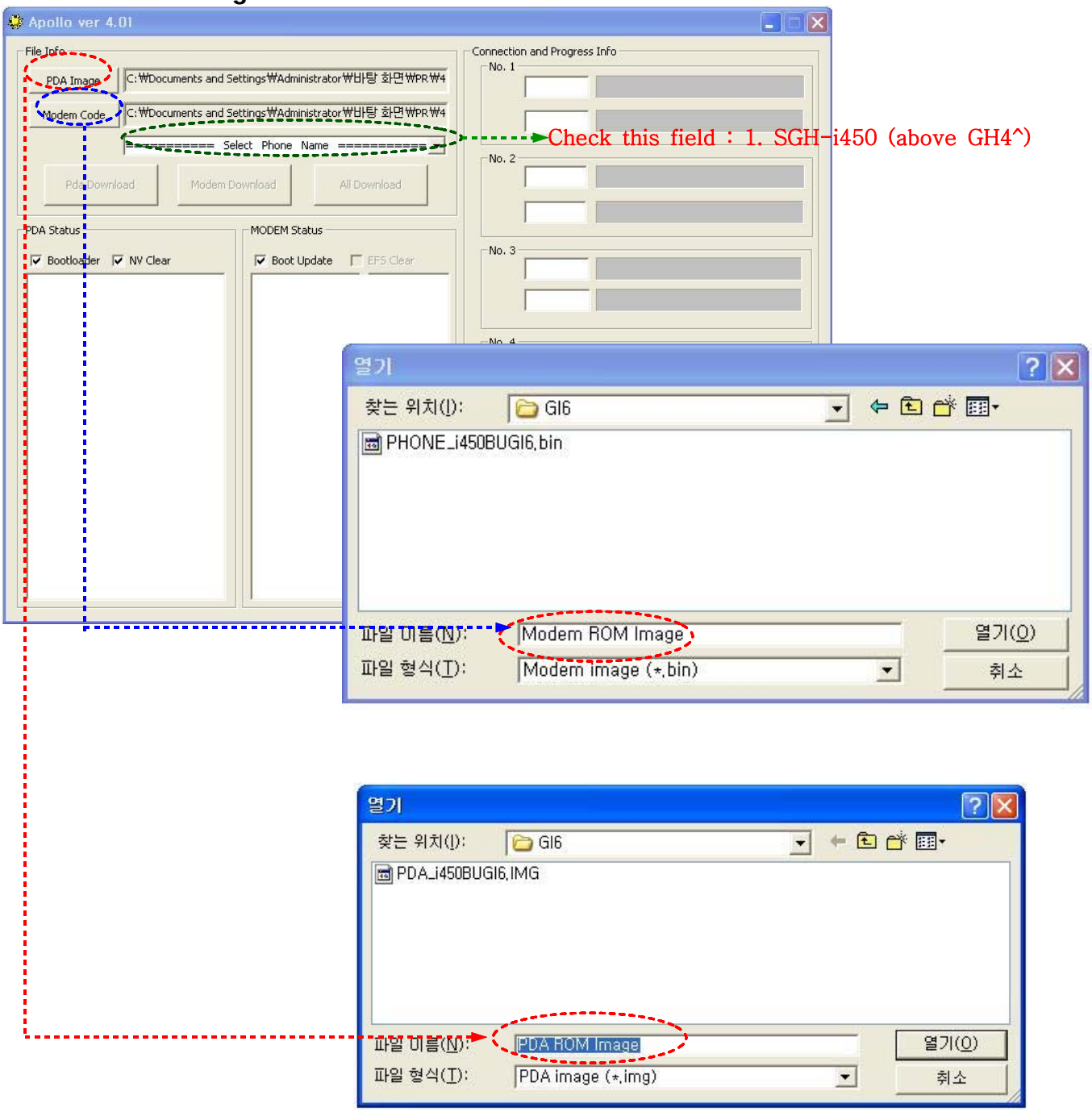

SAMSUNG Proprietary-Contents may change without notice
This Document can not be used without Samsung's authorization

Select the proper check option .

PDA stasus

- Bootloader : Update PDA Bootloader section.
- NV Clear : IMEI section erase.

  You can see following message when you click this option

MODEM Status

- Boot Update : Update Modem Bootloader section.

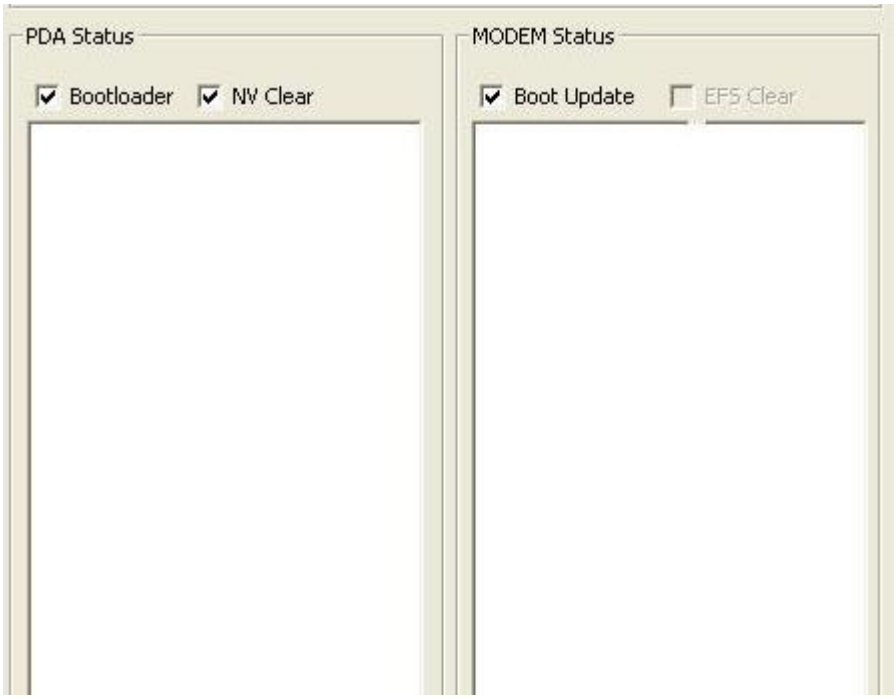

SAMSUNG Proprietary-Contents may change without notice
This Document can not be used without Samsung's authorization

Make sure that phone and host computer connection, click proper download button.

PDA download : Hold 1, 4 keys and power on -> Blue screen with some information.

MODEM download : Hold 7, * keys and power on -> Blinking "MODEM DOWNLOAD" on blue screen

All download : Hold 4, 7 keys and power on -> Blinking "ALL DOWNLOAD" on blue screen

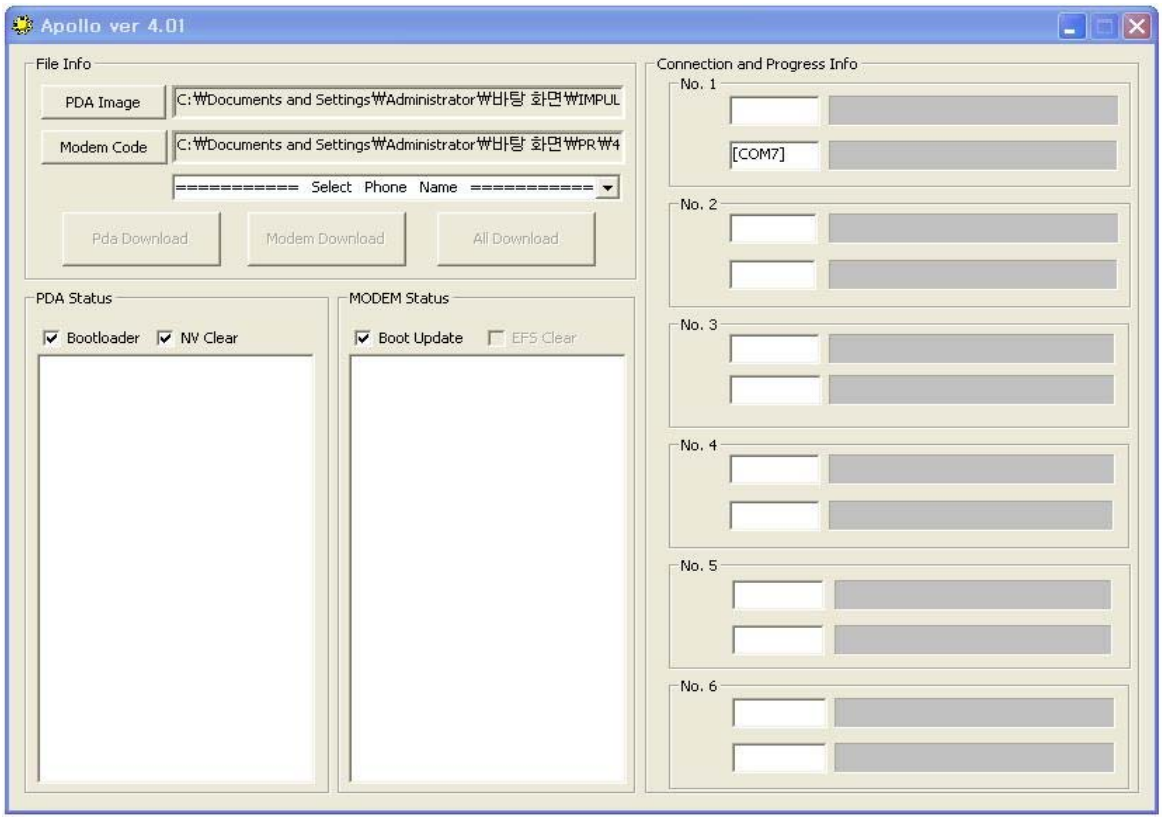

SAMSUNG Proprietary-Contents may change without notice
This Document can not be used without Samsung's authorization

Do NOT interrupt downloading process.

- Pda download time: About 1 min.
- Modem download time : About 2 min.
- All download time: About 3 min.

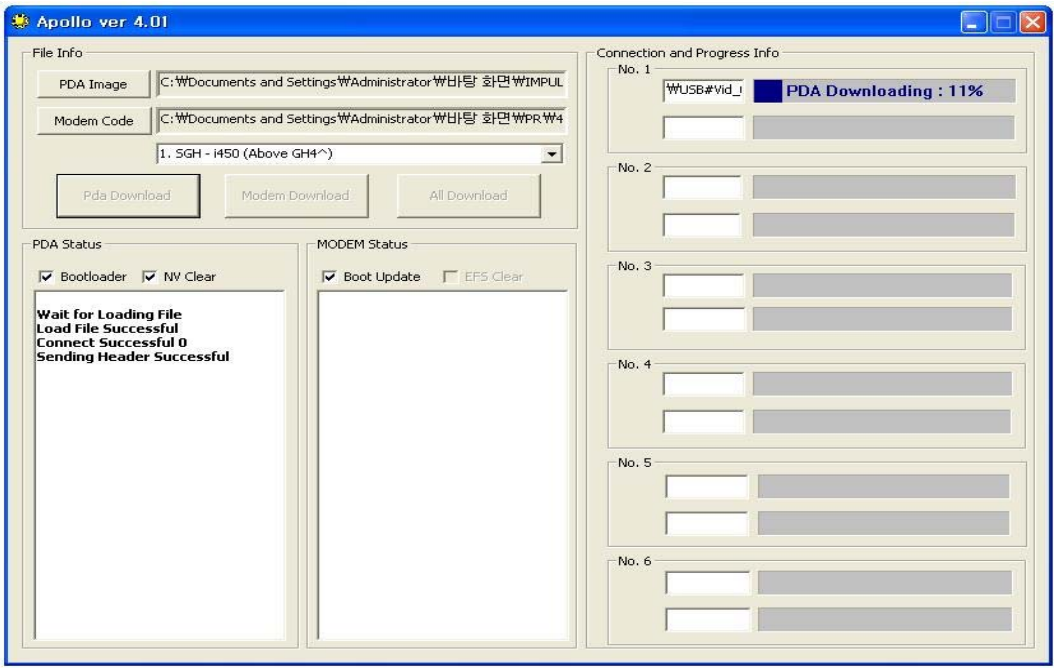

Confirm Download Complete.

- SGH-i450 will be reboot when PDA download complete.

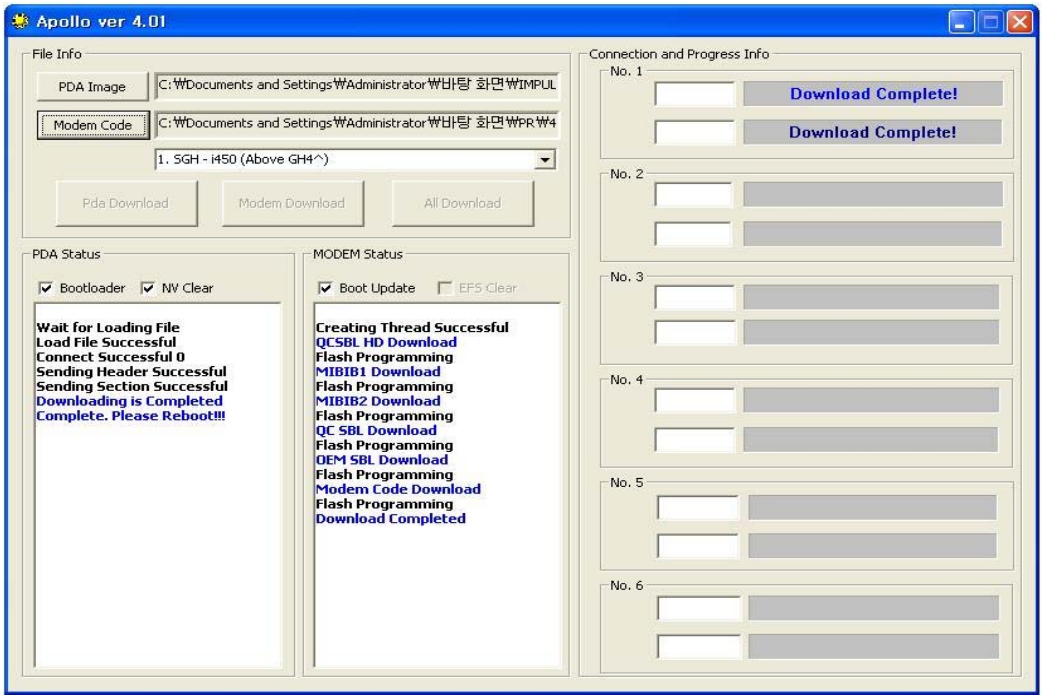

SAMSUNG Proprietary-Contents may change without notice
This Document can not be used without Samsung's authorization

4-2-7. Troubleshooting

Unable to install USB driver.

Try another Download equipment

Try another SGH-i450.

Consult to R&D team.

Download stops in the middle.

Close and launch Apollo again then try again.

Check the battery is charged enough.

Download doesn’t start

Check the connection between Apollo and a SGH-i450.

Check the image that is not damaged.

Select an image and download again.

Phone doesn’t boot up after downloading.

Check the release version of PDA and MODEM. They should be same.

Make sure that rom image, and then try to download.

SAMSUNG Proprietary-Contents may change without notice
This Document can not be used without Samsung's authorization

SAMSUNG Proprietary-Contents may change without notice
This Document can not be used without Samsung's authorization

5. Exploded View and Parts List

5-1. Cellular phone Exploded View

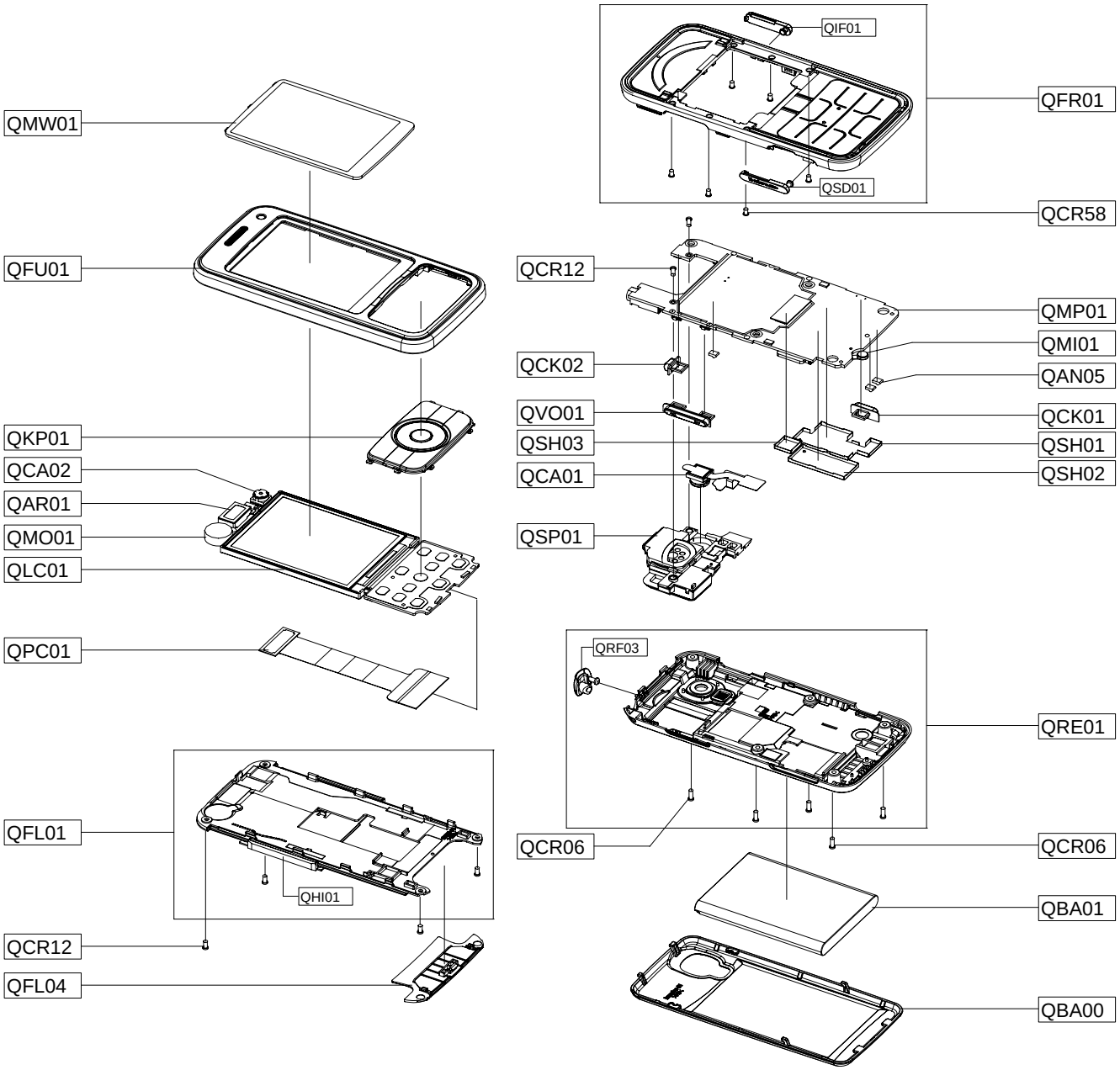

SAMSUNG Proprietary-Contents may change without notice
This Document can not be used without Samsung's authorization

5-2. Cellular phone Parts List

Design LOC	Description	SEC CODE
QAN05	ASSY RUBBER-INTENNA	GH98-03392A
QAR01	AUDIO-RECEIVER	3009-001291
QBA00	PMO COVER-BATT(OPEN)	GH72-44609A
QBA01	INNER BATTERY PACK-1140MAH,BLK	GH43-02985A
QCA01	CAMERA MODULE-2M	GH59-04932A
QCA02	CAMERA MODULE-VGA	GH59-04942A
QCK01	PMO KEY-CAMERA	GH72-43303A
QCK02	PMO KEY-POWER	GH72-43305A
QCR06	SCREW-MACHINE	6001-001155
QCR12	SCREW-MACHINE	6001-001530
QCR12	SCREW-MACHINE	6001-001530
QCR58	SCREW-MACHINE	6001-001870
QFL01	ASSY CASE-SLIDE LOWER	GH98-05825A
QFL04	ASSY COVER-DAMPER LOWER	GH98-05983A
QFR01	ASSY CASE-FRONT	GH98-05826A
QFU01	ASSY CASE-SLIDE UPPER(EU)	GH98-06919A
QHI01	ASSY HINGE-PLATE	GH98-05828A
QIF01	PMO COVER-IF	GH72-43297A
QKP01	ASSY KEYPAD-SUB(BLK/OPEN)	GH98-05830A
QLC01	LCD-MODULE, SGHI450	GH07-01220A
QMI01	MICROPHONE-ASSY-SGHI450	GH30-00419A
QMO01	MOTOR DC-SGHI450	GH31-00374A
QMP01	PBA MAIN-SGHI450	GH92-04056A
QMW01	PCT WINDOW-MAIN	GH72-43518A
QPC01	FPC-SGHI450 CABLE	GH41-01920A
QRE01	ASSY CASE-REAR	GH98-05827A
QRF01	TAPE-RF CONNECTOR CAP	GH74-33834A
QRF03	PMO COVER-3.5 EARJACK	GH72-44410A
QSD01	PMO COVER-MICRO SD	GH72-43296A
QSH01	ICT SHIELD-COVER A	GH70-03032A
QSH02	ICT SHIELD-COVER B	GH70-03033A
QSH03	ICT SHIELD-COVER C	GH70-03034A
QSP01	ASSY ETC-SPEAKER MODULE(BLK)	GH59-05235A
QVO01	PMO KEY-VOLUME	GH72-43304A

SAMSUNG Proprietary-Contents may change without notice
This Document can not be used without Samsung's authorization

Description	SEC CODE
CBF INTERFACE-DLC APCBS10BBE(S	GH39-00922A
ADAPTOR-ATADS10EBE,BLK,EU	GH44-01702A
EARPHONE-SGHE210,AAEP405MBE,A	GH59-04535A
IC-MCP	1108-000050
VINYL-BOHO SPK CASE	GH74-36870A
TAPE-SCREW CAP TOP	GH74-33828A
VINYL-BOHO MAIN WINDOW	GH74-35470A
VINYL-BOHO LCD	GH74-36156A
VINYL-BOHO WINDOW 2	GH74-36177A
LABEL(R)-WATER SOAK	GH68-09361A
TAPE INSU	GH74-18422A
TAPE-LCD 2	GH74-36773A
TAPE ELEC-FRONT	GH74-36844A
VINYL-BOHO SPK CASE	GH74-36870A
BAG PE	6902-000634
LABEL(P)-IMEI	GH68-01335D
LABEL(R)-MAIN(EU)	GH68-16413B
CUSHION-CASE(EU)	GH69-05999A
BOX-UNIT(EU)	GH69-06068B
LABEL(P)-UNIT SEAL	GH68-00518B
IC-MEMORY CARD	1109-001363
S/W CD-SGHI450 PC STUDIO CD	GH46-00558A
MANUAL USERS-XEU ENGLISH QRG	GH68-16578A
MANUAL USERS-XEN DUTCH QSG	GH68-16830A

SAMSUNG Proprietary-Contents may change without notice
This Document can not be used without Samsung's authorization

SAMSUNG Proprietary-Contents may change without notice
This Document can not be used without Samsung's authorization

6. MAIN Electrical Parts List

SEC Code	Design LOC	Description	STATUS
GH71-06262A	ANT101	NPR-ANTENNA CONTACT V2	SA
GH71-06262A	ANT102	NPR-ANTENNA CONTACT V2	SA
GH71-06262A	ANT103	NPR-ANTENNA CONTACT V2	SA
GH71-06721A	ANT104	NPR-ANT CONTACT	SA
4302-001180	BAT301	BATTERY-LI(2ND)	SA
3711-006249	BTC301	HEADER-BATTERY	SA
2203-000812	C100	C-CER,CHIP	SA
2203-005659	C101	C-CER,CHIP	SA
2203-005659	C102	C-CER,CHIP	SA
2203-005659	C103	C-CER,CHIP	SA
2203-005659	C104	C-CER,CHIP	SA
2203-000812	C105	C-CER,CHIP	SA
2203-000466	C106	C-CER,CHIP	SA
2203-000233	C107	C-CER,CHIP	SA
2203-000627	C108	C-CER,CHIP	SNA
2203-000627	C109	C-CER,CHIP	SNA
2203-006423	C110	C-CER,CHIP	SA
2203-000233	C111	C-CER,CHIP	SA
2203-000233	C112	C-CER,CHIP	SA
2203-005682	C113	C-CER,CHIP	SA
2203-000233	C114	C-CER,CHIP	SA
2203-000330	C115	C-CER,CHIP	SA
2203-000438	C116	C-CER,CHIP	SA
2203-006048	C117	C-CER,CHIP	SA
2203-000627	C118	C-CER,CHIP	SNA
2203-000812	C119	C-CER,CHIP	SA
2203-001437	C120	C-CER,CHIP	SA
2203-005382	C121	C-CER,CHIP	SA
2203-005382	C122	C-CER,CHIP	SA
2203-005682	C124	C-CER,CHIP	SA
2203-006423	C127	C-CER,CHIP	SA
2203-001072	C128	C-CER,CHIP	SA
2203-006423	C129	C-CER,CHIP	SA
2203-000714	C130	C-CER,CHIP	SA
2203-002668	C131	C-CER,CHIP	SA
2203-000627	C133	C-CER,CHIP	SNA
2203-005682	C134	C-CER,CHIP	SA
2203-005736	C136	C-CER,CHIP	SA
2203-000233	C137	C-CER,CHIP	SA
2203-006423	C138	C-CER,CHIP	SA
2203-005725	C139	C-CER,CHIP	SA
2203-005725	C140	C-CER,CHIP	SA
2203-000870	C141	C-CER,CHIP	SA
2203-006423	C142	C-CER,CHIP	SA
2203-001072	C143	C-CER,CHIP	SA
2203-000870	C145	C-CER,CHIP	SA
2203-006423	C146	C-CER,CHIP	SA
2203-000438	C147	C-CER,CHIP	SA
2203-006423	C148	C-CER,CHIP	SA
2203-006423	C149	C-CER,CHIP	SA
2203-000812	C150	C-CER,CHIP	SA
2203-000438	C151	C-CER,CHIP	SA
2203-006194	C152	C-CER,CHIP	SA

SAMSUNG Proprietary-Contents may change without notice

This Document can not be used without Samsung's authorization

SEC Code	Design LOC	Description	STATUS
2203-006681	C153	C-CER,CHIP	SA
2203-005806	C154	C-CER,CHIP	SNA
2203-000627	C155	C-CER,CHIP	SNA
2203-005736	C156	C-CER,CHIP	SA
2203-000438	C157	C-CER,CHIP	SA
2203-000254	C158	C-CER,CHIP	SA
2203-000627	C159	C-CER,CHIP	SNA
2203-005725	C160	C-CER,CHIP	SA
2203-006562	C161	C-CER,CHIP	SA
2203-000627	C162	C-CER,CHIP	SNA
2203-006824	C163	C-CER,CHIP	SA
2203-005446	C165	C-CER,CHIP	SA
2203-000438	C167	C-CER,CHIP	SA
2203-006048	C168	C-CER,CHIP	SA
2203-006137	C169	C-CER,CHIP	SA
2203-006841	C170	C-CER,CHIP	SA
2203-006048	C171	C-CER,CHIP	SA
2203-006048	C172	C-CER,CHIP	SA
2203-006399	C173	C-CER,CHIP	SA
2203-006399	C174	C-CER,CHIP	SA
2203-006399	C175	C-CER,CHIP	SA
2203-006399	C176	C-CER,CHIP	SA
2203-006399	C177	C-CER,CHIP	SA
2203-000330	C178	C-CER,CHIP	SA
2203-006137	C179	C-CER,CHIP	SA
2203-006841	C180	C-CER,CHIP	SA
2203-005682	C182	C-CER,CHIP	SA
2203-001259	C184	C-CER,CHIP	SA
2203-003054	C186	C-CER,CHIP	SA
2203-000233	C188	C-CER,CHIP	SA
2203-000330	C189	C-CER,CHIP	SA
2203-000812	C190	C-CER,CHIP	SA
2203-000627	C191	C-CER,CHIP	SNA
2203-006423	C192	C-CER,CHIP	SA
2203-000854	C194	C-CER,CHIP	SA
2203-000466	C196	C-CER,CHIP	SA
2203-005383	C197	C-CER,CHIP	SA
2203-005806	C199	C-CER,CHIP	SNA
2203-006423	C200	C-CER,CHIP	SA
2203-006562	C201	C-CER,CHIP	SA
2203-006048	C202	C-CER,CHIP	SA
2203-006048	C203	C-CER,CHIP	SA
2203-006048	C204	C-CER,CHIP	SA
2203-006562	C205	C-CER,CHIP	SA
2203-006562	C206	C-CER,CHIP	SA
2203-006562	C207	C-CER,CHIP	SA
2203-006562	C208	C-CER,CHIP	SA
2203-000489	C209	C-CER,CHIP	SA
2203-005480	C210	C-CER,CHIP	SA
2203-006824	C216	C-CER,CHIP	SA
2203-000254	C224	C-CER,CHIP	SA
2203-006048	C225	C-CER,CHIP	SA
2203-006048	C226	C-CER,CHIP	SA

SAMSUNG Proprietary-Contents may change without notice
This Document can not be used without Samsung's authorization

SEC Code	Design LOC	Description	STATUS
2203-006562	C227	C-CER,CHIP	SA
2203-006872	C228	C-CER,CHIP	SA
2203-000995	C229	C-CER,CHIP	SA
2203-006562	C238	C-CER,CHIP	SA
2203-006562	C239	C-CER,CHIP	SA
2203-006048	C248	C-CER,CHIP	SA
2203-006048	C249	C-CER,CHIP	SA
2203-006048	C251	C-CER,CHIP	SA
2203-006562	C253	C-CER,CHIP	SA
2203-006825	C255	C-CER,CHIP	SA
2203-000254	C256	C-CER,CHIP	SA
2203-006048	C257	C-CER,CHIP	SA
2203-000254	C259	C-CER,CHIP	SA
2203-006048	C261	C-CER,CHIP	SA
2203-006048	C262	C-CER,CHIP	SA
2203-006562	C264	C-CER,CHIP	SA
2203-005482	C268	C-CER,CHIP	SA
2203-006048	C272	C-CER,CHIP	SA
2203-005482	C274	C-CER,CHIP	SA
2203-006562	C279	C-CER,CHIP	SA
2203-006423	C290	C-CER,CHIP	SA
2203-006838	C301	C-CER,CHIP	SA
2203-006824	C302	C-CER,CHIP	SA
2203-000233	C303	C-CER,CHIP	SA
2203-000330	C304	C-CER,CHIP	SA
2203-000330	C305	C-CER,CHIP	SA
2203-005482	C306	C-CER,CHIP	SA
2203-006841	C313	C-CER,CHIP	SA
2203-006841	C314	C-CER,CHIP	SA
2203-002709	C315	C-CER,CHIP	SA
2203-006474	C316	C-CER,CHIP	SA
2203-002709	C317	C-CER,CHIP	SA
2203-006208	C318	C-CER,CHIP	SA
2203-006208	C319	C-CER,CHIP	SA
2203-006838	C320	C-CER,CHIP	SA
2203-006208	C321	C-CER,CHIP	SA
2203-006208	C322	C-CER,CHIP	SA
2203-002709	C323	C-CER,CHIP	SA
2203-006824	C324	C-CER,CHIP	SA
2203-002709	C325	C-CER,CHIP	SA
2203-006824	C326	C-CER,CHIP	SA
2203-002709	C330	C-CER,CHIP	SA
2203-006841	C343	C-CER,CHIP	SA
2203-002709	C344	C-CER,CHIP	SA
2203-002709	C345	C-CER,CHIP	SA
2203-006048	C346	C-CER,CHIP	SA
2203-006260	C360	C-CER,CHIP	SA
2203-006053	C362	C-CER,CHIP	SA
2203-000189	C363	C-CER,CHIP	SA
2203-002709	C364	C-CER,CHIP	SA
2203-006824	C365	C-CER,CHIP	SA
2203-000330	C410	C-CER,CHIP	SA
2203-000330	C411	C-CER,CHIP	SA

SAMSUNG Proprietary-Contents may change without notice
This Document can not be used without Samsung's authorization

SEC Code	Design LOC	Description	STATUS
2203-006562	C413	C-CER,CHIP	SA
2203-006562	C414	C-CER,CHIP	SA
2203-005819	C416	C-CER,CHIP	SA
2203-005819	C417	C-CER,CHIP	SA
2203-006562	C418	C-CER,CHIP	SA
2203-005819	C419	C-CER,CHIP	SA
2203-006562	C422	C-CER,CHIP	SA
2203-006324	C424	C-CER,CHIP	SA
2203-006562	C428	C-CER,CHIP	SA
2203-006562	C429	C-CER,CHIP	SA
2203-006562	C430	C-CER,CHIP	SA
2203-006562	C431	C-CER,CHIP	SA
2203-005682	C432	C-CER,CHIP	SA
2203-006423	C433	C-CER,CHIP	SA
2203-006562	C434	C-CER,CHIP	SA
2203-006562	C435	C-CER,CHIP	SA
2203-006562	C436	C-CER,CHIP	SA
2203-006562	C437	C-CER,CHIP	SA
2203-006423	C438	C-CER,CHIP	SA
2203-006562	C441	C-CER,CHIP	SA
2203-003054	C501	C-CER,CHIP	SA
2203-003054	C502	C-CER,CHIP	SA
2203-003054	C503	C-CER,CHIP	SA
2203-000812	C504	C-CER,CHIP	SA
2203-000812	C505	C-CER,CHIP	SA
2203-000812	C506	C-CER,CHIP	SA
2203-006399	C507	C-CER,CHIP	SA
2203-005682	C508	C-CER,CHIP	SA
2203-006423	C509	C-CER,CHIP	SA
2203-006423	C510	C-CER,CHIP	SA
2203-006423	C511	C-CER,CHIP	SA
2203-000812	C512	C-CER,CHIP	SA
2203-000812	C513	C-CER,CHIP	SA
2203-000812	C514	C-CER,CHIP	SA
2203-003054	C515	C-CER,CHIP	SA
2203-003054	C516	C-CER,CHIP	SA
2203-003054	C517	C-CER,CHIP	SA
2203-000812	C519	C-CER,CHIP	SA
2203-000812	C520	C-CER,CHIP	SA
2203-005482	C521	C-CER,CHIP	SA
2203-000643	C529	C-CER,CHIP	SA
2203-000812	C530	C-CER,CHIP	SA
2203-000812	C531	C-CER,CHIP	SA
2203-006681	C533	C-CER,CHIP	SA
2203-006681	C534	C-CER,CHIP	SA
2203-006681	C535	C-CER,CHIP	SA
2203-006091	C536	C-CER,CHIP	SA
2203-006091	C537	C-CER,CHIP	SA
2007-009410	C538	R-CHIP	SA
2007-009410	C539	R-CHIP	SA
2203-006562	C541	C-CER,CHIP	SA
2203-001259	C542	C-CER,CHIP	SA
2203-000812	C543	C-CER,CHIP	SA

SAMSUNG Proprietary-Contents may change without notice
This Document can not be used without Samsung's authorization

SEC Code	Design LOC	Description	STATUS
2203-006260	C544	C-CER,CHIP	SA
2203-006260	C545	C-CER,CHIP	SA
2203-006562	C546	C-CER,CHIP	SA
2203-006562	C547	C-CER,CHIP	SA
2203-000812	C548	C-CER,CHIP	SA
2203-005779	C549	C-CER,CHIP	SA
2203-005779	C550	C-CER,CHIP	SA
2203-005779	C551	C-CER,CHIP	SA
2203-005779	C552	C-CER,CHIP	SA
2203-006048	C600	C-CER,CHIP	SA
2203-006048	C601	C-CER,CHIP	SA
2203-006048	C602	C-CER,CHIP	SA
2203-006048	C603	C-CER,CHIP	SA
2203-006562	C604	C-CER,CHIP	SA
2203-006824	C605	C-CER,CHIP	SA
2203-006824	C606	C-CER,CHIP	SA
2203-005482	C607	C-CER,CHIP	SA
2203-006978	C608	C-CER,CHIP	SA
2203-006839	C609	C-CER,CHIP	SA
2203-006562	C610	C-CER,CHIP	SA
2203-006824	C611	C-CER,CHIP	SA
2203-006824	C612	C-CER,CHIP	SA
2203-006562	C616	C-CER,CHIP	SA
2203-006681	C618	C-CER,CHIP	SA
2203-006885	C619	C-CER,CHIP	SA
2203-000643	C620	C-CER,CHIP	SA
2203-003054	C621	C-CER,CHIP	SA
2203-003054	C622	C-CER,CHIP	SA
2203-000438	C623	C-CER,CHIP	SA
2203-006824	C624	C-CER,CHIP	SA
2203-006824	C625	C-CER,CHIP	SA
2203-006562	C626	C-CER,CHIP	SA
2203-006562	C627	C-CER,CHIP	SA
2203-002709	C702	C-CER,CHIP	SA
2203-002709	C703	C-CER,CHIP	SA
2203-000386	C704	C-CER,CHIP	SA
2203-000386	C705	C-CER,CHIP	SA
2203-000386	C706	C-CER,CHIP	SA
2203-000386	C707	C-CER,CHIP	SA
2203-006324	C708	C-CER,CHIP	SA
2203-006324	C709	C-CER,CHIP	SA
2203-006824	C710	C-CER,CHIP	SA
2203-005717	C711	C-CER,CHIP	SA
2203-005717	C712	C-CER,CHIP	SA
2203-005717	C713	C-CER,CHIP	SA
2203-005717	C714	C-CER,CHIP	SA
2203-005717	C715	C-CER,CHIP	SA
2203-005717	C716	C-CER,CHIP	SA
2203-005717	C717	C-CER,CHIP	SA
2203-005717	C718	C-CER,CHIP	SA
2203-006423	C800	C-CER,CHIP	SA
2203-006423	C801	C-CER,CHIP	SA
2203-006423	C802	C-CER,CHIP	SA

SAMSUNG Proprietary-Contents may change without notice
This Document can not be used without Samsung's authorization

SEC Code	Design LOC	Description	STATUS
2203-006423	C803	C-CER,CHIP	SA
2203-006423	C804	C-CER,CHIP	SA
2203-006423	C805	C-CER,CHIP	SA
2203-006423	C806	C-CER,CHIP	SA
2203-006423	C807	C-CER,CHIP	SA
2203-006423	C808	C-CER,CHIP	SA
2203-006423	C809	C-CER,CHIP	SA
2203-006423	C810	C-CER,CHIP	SA
2203-006423	C816	C-CER,CHIP	SA
2203-006423	C817	C-CER,CHIP	SA
2203-006423	C818	C-CER,CHIP	SA
2203-006423	C819	C-CER,CHIP	SA
2203-006423	C820	C-CER,CHIP	SA
2203-006423	C821	C-CER,CHIP	SA
2203-006423	C822	C-CER,CHIP	SA
2203-006423	C823	C-CER,CHIP	SA
2203-006423	C824	C-CER,CHIP	SA
2203-006423	C825	C-CER,CHIP	SA
2203-006423	C826	C-CER,CHIP	SA
2203-005482	C839	C-CER,CHIP	SA
2203-006423	C840	C-CER,CHIP	SA
2203-006825	C841	C-CER,CHIP	SA
2203-006423	C842	C-CER,CHIP	SA
2203-006423	C843	C-CER,CHIP	SA
2203-006423	C852	C-CER,CHIP	SA
2203-006562	C853	C-CER,CHIP	SA
2203-006562	C854	C-CER,CHIP	SA
2203-006423	C855	C-CER,CHIP	SA
2203-006423	C856	C-CER,CHIP	SA
2203-006423	C857	C-CER,CHIP	SA
2203-006423	C858	C-CER,CHIP	SA
2203-006423	C859	C-CER,CHIP	SA
2203-006423	C860	C-CER,CHIP	SA
2203-006423	C861	C-CER,CHIP	SA
2203-006423	C862	C-CER,CHIP	SA
2203-006423	C863	C-CER,CHIP	SA
2203-006423	C864	C-CER,CHIP	SA
2203-006562	C865	C-CER,CHIP	SA
2203-006562	C900	C-CER,CHIP	SA
2203-006562	C901	C-CER,CHIP	SA
2203-006423	C902	C-CER,CHIP	SA
2203-006423	C903	C-CER,CHIP	SA
2203-006423	C904	C-CER,CHIP	SA
2203-006423	C905	C-CER,CHIP	SA
3709-001392	CD301	CONNECTOR-CARD EDGE	SA
0407-001002	D301	DIODE-ARRAY	SA
0407-001002	D600	DIODE-ARRAY	SA
0403-001547	D601	DIODE-ZENER	SA
0407-001007	D603	DIODE-ARRAY	SA
3722-002609	EAR501	JACK-EAR PHONE	SA
2911-000091	F101	DUPLEXER-FEM	SA
2904-001703	F102	FILTER-SAW	SA
2904-001629	F103	FILTER-SAW	SA

SAMSUNG Proprietary-Contents may change without notice
This Document can not be used without Samsung's authorization

SEC Code	Design LOC	Description	STATUS
2910-000024	F104	DUPLEXER-SAW	SA
4709-001399	F105	COUPLER-DIRECTION	SA
2904-001702	F106	FILTER-SAW	SA
4709-001543	F107	BALUN	SA
2901-001353	F700	FILTER-EMI/ESD	SA
2901-001353	F701	FILTER-EMI/ESD	SA
2901-001353	F702	FILTER-EMI/ESD	SA
2901-001353	F703	FILTER-EMI/ESD	SA
2901-001353	F704	FILTER-EMI/ESD	SA
2901-001353	F705	FILTER-EMI/ESD	SA
2901-001353	F706	FILTER-EMI/ESD	SA
2901-001353	F707	FILTER-EMI/ESD	SA
GH70-02640A	FPC100	ICT SHIELD-CAN CLIP	SA
GH70-02640A	FPC101	ICT SHIELD-CAN CLIP	SA
GH70-02640A	FPC102	ICT SHIELD-CAN CLIP	SA
GH70-02640A	FPC103	ICT SHIELD-CAN CLIP	SA
GH70-02640A	FPC104	ICT SHIELD-CAN CLIP	SA
GH70-02640A	FPC105	ICT SHIELD-CAN CLIP	SA
GH70-02640A	FPC106	ICT SHIELD-CAN CLIP	SA
GH70-02640A	FPC107	ICT SHIELD-CAN CLIP	SA
GH70-02640A	FPC108	ICT SHIELD-CAN CLIP	SA
GH70-02640A	FPC109	ICT SHIELD-CAN CLIP	SA
GH70-02640A	FPC110	ICT SHIELD-CAN CLIP	SA
GH70-02640A	FPC111	ICT SHIELD-CAN CLIP	SA
GH70-02640A	FPC112	ICT SHIELD-CAN CLIP	SA
GH70-02640A	FPC113	ICT SHIELD-CAN CLIP	SA
GH70-02640A	FPC114	ICT SHIELD-CAN CLIP	SA
3711-005945	HDC700	HEADER-BOARD TO BOARD	SA
3711-005643	HDC701	HEADER-BOARD TO BOARD	SA
3711-005550	HDC702	HEADER-BOARD TO BOARD	SA
3711-005550	HDC703	HEADER-BOARD TO BOARD	SA
3710-002499	IFC600	SOCKET-INTERFACE	SA
2703-002202	L101	INDUCTOR-SMD	SA
2703-001180	L102	INDUCTOR-SMD	SA
2703-002281	L103	INDUCTOR-SMD	SA
2703-002204	L104	INDUCTOR-SMD	SA
2703-002281	L105	INDUCTOR-SMD	SA
2703-002281	L106	INDUCTOR-SMD	SA
2703-002200	L107	INDUCTOR-SMD	SA
2703-002281	L108	INDUCTOR-SMD	SA
2703-002202	L109	INDUCTOR-SMD	SA
2703-001752	L110	INDUCTOR-SMD	SA
2703-002202	L111	INDUCTOR-SMD	SA
2703-002367	L112	INDUCTOR-SMD	SA
2703-001749	L113	INDUCTOR-SMD	SA
2703-002367	L114	INDUCTOR-SMD	SA
2703-002208	L115	INDUCTOR-SMD	SA
2703-002369	L116	INDUCTOR-SMD	SA
2703-002199	L117	INDUCTOR-SMD	SA
2703-002368	L120	INDUCTOR-SMD	SA
3301-001756	L125	BEAD-SMD	SA
2703-002208	L129	INDUCTOR-SMD	SA
2703-002367	L132	INDUCTOR-SMD	SA

SAMSUNG Proprietary-Contents may change without notice
This Document can not be used without Samsung's authorization

SEC Code	Design LOC	Description	STATUS
2703-002367	L133	INDUCTOR-SMD	SA
2703-002281	L134	INDUCTOR-SMD	SA
2703-002281	L135	INDUCTOR-SMD	SA
2703-001178	L136	INDUCTOR-SMD	SA
2703-002782	L301	INDUCTOR-SMD	SA
2703-002782	L302	INDUCTOR-SMD	SA
2703-002782	L307	INDUCTOR-SMD	SA
2703-002814	L401	INDUCTOR-SMD	SA
2703-002814	L402	INDUCTOR-SMD	SA
3301-001438	L501	BEAD-SMD	SA
3301-001438	L502	BEAD-SMD	SA
3301-001438	L503	BEAD-SMD	SA
3301-001438	L504	BEAD-SMD	SA
3301-001438	L505	BEAD-SMD	SA
2703-002313	L506	INDUCTOR-SMD	SA
3301-001158	L507	BEAD-SMD	SA
3301-001158	L508	BEAD-SMD	SA
3301-001342	L600	BEAD-SMD	SA
3301-001342	L601	BEAD-SMD	SA
2703-002313	L602	INDUCTOR-SMD	SA
2703-002368	L603	INDUCTOR-SMD	SA
2703-002368	L604	INDUCTOR-SMD	SA
1205-003169	MOD100	IC-DATA COMM./GEN.	SA
2801-004455	OSC100	CRYSTAL-SMD	SA
2801-004466	OSC301	CRYSTAL-SMD	SA
2801-004466	OSC400	CRYSTAL-SMD	SA
2804-001736	OSC401	OSCILLATOR-CLOCK	SA
1201-002446	PAM100	IC-POWER AMP	SA
1201-002531	PAM101	IC-POWER AMP	SA
2007-000172	R100	R-CHIP	SA
2007-003020	R1002	R-CHIP	SA
2007-000171	R101	R-CHIP	SA
2007-000171	R102	R-CHIP	SA
2007-000171	R103	R-CHIP	SA
2007-000171	R105	R-CHIP	SA
2007-008542	R107	R-CHIP	SA
2007-000174	R109	R-CHIP	SA
2007-008542	R110	R-CHIP	SA
2007-003015	R111	R-CHIP	SA
2007-007193	R112	R-CHIP	SA
2007-001305	R113	R-CHIP	SA
2007-001305	R114	R-CHIP	SA
2007-008542	R116	R-CHIP	SA
2007-007309	R117	R-CHIP	SA
2007-003015	R119	R-CHIP	SA
2007-007193	R125	R-CHIP	SA
2007-008544	R126	R-CHIP	SA
2007-007798	R127	R-CHIP	SA
2007-009801	R128	R-CHIP	SA
2007-000141	R129	R-CHIP	SA
2007-001298	R130	R-CHIP	SA
2007-001305	R132	R-CHIP	SA
2007-001305	R133	R-CHIP	SA

SAMSUNG Proprietary-Contents may change without notice
This Document can not be used without Samsung's authorization

SEC Code	Design LOC	Description	STATUS
2007-008806	R135	R-CHIP	SA
2007-007009	R138	R-CHIP	SA
2007-000138	R139	R-CHIP	SA
2007-000138	R140	R-CHIP	SA
2007-009801	R143	R-CHIP	SA
2007-008542	R148	R-CHIP	SA
2007-008542	R149	R-CHIP	SA
2007-000161	R152	R-CHIP	SA
2007-001290	R200	R-CHIP	SA
2007-000148	R207	R-CHIP	SA
2007-000137	R209	R-CHIP	SA
2007-001298	R222	R-CHIP	SA
2007-000148	R226	R-CHIP	SA
2007-000148	R229	R-CHIP	SA
2007-007316	R239	R-CHIP	SA
2007-001292	R241	R-CHIP	SA
2007-000170	R246	R-CHIP	SA
2007-007107	R251	R-CHIP	SA
2007-007107	R252	R-CHIP	SA
2007-000070	R300	R-CHIP	SA
2007-000157	R305	R-CHIP	SA
2007-008213	R307	R-CHIP	SA
2007-008043	R308	R-CHIP	SA
2007-007468	R312	R-CHIP	SA
2007-009171	R313	R-CHIP	SA
2007-009171	R316	R-CHIP	SA
2007-000157	R321	R-CHIP	SA
2007-000157	R322	R-CHIP	SA
2007-000157	R323	R-CHIP	SA
2007-000157	R324	R-CHIP	SA
2007-000157	R325	R-CHIP	SA
2007-000157	R326	R-CHIP	SA
2007-000162	R327	R-CHIP	SA
2007-008806	R328	R-CHIP	SA
2007-008806	R329	R-CHIP	SA
2007-008806	R330	R-CHIP	SA
2007-008806	R331	R-CHIP	SA
2007-008806	R332	R-CHIP	SA
2007-008806	R333	R-CHIP	SA
2007-007142	R338	R-CHIP	SA
2007-000162	R381	R-CHIP	SA
2007-000162	R382	R-CHIP	SA
2007-007316	R383	R-CHIP	SA
2007-001119	R384	R-CHIP	SA
2007-007766	R385	R-CHIP	SA
2007-007132	R389	R-CHIP	SA
2007-000165	R390	R-CHIP	SA
2007-008055	R401	R-CHIP	SA
2007-008055	R402	R-CHIP	SA
2007-000162	R403	R-CHIP	SA
2007-000143	R408	R-CHIP	SA
2007-000143	R409	R-CHIP	SA
2007-000162	R410	R-CHIP	SA

SAMSUNG Proprietary-Contents may change without notice
This Document can not be used without Samsung's authorization

SEC Code	Design LOC	Description	STATUS
2007-000159	R411	R-CHIP	SA
2007-001298	R412	R-CHIP	SA
2007-000141	R413	R-CHIP	SA
2007-008544	R503	R-CHIP	SA
2007-008478	R504	R-CHIP	SA
2007-008478	R505	R-CHIP	SA
2007-008544	R506	R-CHIP	SA
2007-008137	R510	R-CHIP	SA
2007-008137	R511	R-CHIP	SA
2007-000165	R512	R-CHIP	SA
2007-000170	R514	R-CHIP	SA
2007-000169	R515	R-CHIP	SA
2007-000170	R516	R-CHIP	SA
2007-000170	R517	R-CHIP	SA
2007-008275	R518	R-CHIP	SA
2007-008275	R519	R-CHIP	SA
2007-003029	R520	R-CHIP	SA
2007-001298	R521	R-CHIP	SA
2007-001298	R522	R-CHIP	SA
2007-009793	R524	R-CHIP	SA
2007-009793	R525	R-CHIP	SA
2007-000164	R600	R-CHIP	SA
2007-000164	R601	R-CHIP	SA
2007-001298	R602	R-CHIP	SA
2007-000171	R603	R-CHIP	SA
2007-001298	R604	R-CHIP	SA
2007-007107	R609	R-CHIP	SA
2007-007107	R610	R-CHIP	SA
2007-008419	R614	R-CHIP	SA
2007-008419	R615	R-CHIP	SA
2007-008419	R616	R-CHIP	SA
2007-008055	R617	R-CHIP	SA
2007-007981	R618	R-CHIP	SA
2007-000170	R621	R-CHIP	SA
2007-008045	R622	R-CHIP	SA
2007-008045	R623	R-CHIP	SA
2007-001308	R702	R-CHIP	SA
2007-007306	R703	R-CHIP	SA
2007-007306	R704	R-CHIP	SA
2007-008672	R705	R-CHIP	SA
2007-007312	R710	R-CHIP	SA
2007-007090	R711	R-CHIP	SA
2007-001339	R712	R-CHIP	SA
2007-001339	R713	R-CHIP	SA
2007-009408	R800	R-CHIP	SA
2007-009408	R801	R-CHIP	SA
2007-007190	R802	R-CHIP	SA
2007-000143	R804	R-CHIP	SA
2007-000143	R805	R-CHIP	SA
2007-000143	R806	R-CHIP	SA
2007-000143	R807	R-CHIP	SA
2007-007190	R809	R-CHIP	SA
2007-008419	R815	R-CHIP	SA

SAMSUNG Proprietary-Contents may change without notice
This Document can not be used without Samsung's authorization

SEC Code	Design LOC	Description	STATUS
2007-000171	R900	R-CHIP	SA
2007-000171	R902	R-CHIP	SA
2007-000162	R905	R-CHIP	SA
2007-000162	R906	R-CHIP	SA
2007-000162	R907	R-CHIP	SA
2007-000162	R908	R-CHIP	SA
3705-001421	RFS101	CONNECTOR-COAXIAL	SA
3709-001400	SIM301	CONNECTOR-CARD EDGE	SA
2404-001381	TA102	C-TA,CHIP	SA
2404-001496	TA103	C-TA,CHIP	SA
2404-001415	TA401	C-TA,CHIP	SA
2404-001415	TA402	C-TA,CHIP	SA
2404-001339	TA403	C-TA,CHIP	SA
2404-001381	TA404	C-TA,CHIP	SA
2404-001381	TA405	C-TA,CHIP	SA
2404-001415	TA406	C-TA,CHIP	SA
2404-001381	TA407	C-TA,CHIP	SA
2404-001352	TA501	C-TA,CHIP	SA
2404-001381	TA502	C-TA,CHIP	SA
2404-001381	TA503	C-TA,CHIP	SA
2404-001347	TA600	C-TA,CHIP	SA
2404-001347	TA601	C-TA,CHIP	SA
2404-001381	TA800	C-TA,CHIP	SA
2404-001381	TA801	C-TA,CHIP	SA
3404-001317	TAC700	SWITCH-TACT	SA
3404-001303	TAC701	SWITCH-TACT	SA
3404-001303	TAC702	SWITCH-TACT	SA
3404-001303	TAC703	SWITCH-TACT	SA
2809-001280	TCX101	OSCILLATOR-VCTCXO	SA
1404-001221	TH200	THERMISTOR-NTC	SA
0504-000168	TR301	TR-DIGITAL	SA
0504-000168	TR302	TR-DIGITAL	SA
0505-001165	TR600	FET-SILICON	SA
0504-000168	TR601	TR-DIGITAL	SA
1205-003285	U101	IC-TRANSCEIVER	SA
1204-002700	U103	IC-TUNER	SA
0801-003052	U200	IC-CMOS LOGIC	SA
0801-002294	U201	IC-CMOS LOGIC	SA
1205-002767	U202	IC-SWITCH	SA
1001-001401	U203	IC-ANALOG SWITCH	SA
1203-004926	U301	IC-POWER SUPERVISOR	SA
1203-004838	U303	IC-BATTERY	SA
1203-004430	U304	IC-VOL. DETECTOR	SA
0406-001200	U306	DIODE-TVS	SA
0406-001200	U307	DIODE-TVS	SA
1203-004621	U400	IC-POWER SUPERVISOR	SA
1001-001461	U402	IC-ANALOG SWITCH	SA
1203-004464	U403	IC-VOL. DETECTOR	SA
0801-003129	U404	IC-CMOS LOGIC	SA
1001-001362	U501	IC-ANALOG SWITCH	SA
1001-001436	U502	IC-ANALOG SWITCH	SA
1201-002180	U503	IC-AUDIO AMP	SA
1201-002240	U504	IC-AUDIO AMP	SA

SAMSUNG Proprietary-Contents may change without notice
This Document can not be used without Samsung's authorization

SEC Code	Design LOC	Description	STATUS
1202-001068	U505	IC-VOLTAGE COMP.	SA
1203-003737	U600	IC-POSI.FIXED REG.	SA
1203-004607	U601	IC-MULTI REG.	SA
1009-001027	U602	IC-HALL EFFECT S/W	SA
1009-001027	U603	IC-HALL EFFECT S/W	SA
1203-004120	U604	IC-MULTI REG.	SA
1203-004249	U606	IC-MULTI REG.	SA
1001-001336	U607	IC-ANALOG SWITCH	SA
1203-002716	U608	IC-VOL. DETECTOR	SA
0801-003016	U609	IC-CMOS LOGIC	SA
0801-003012	U610	IC-CMOS LOGIC	SA
0801-002294	U611	IC-CMOS LOGIC	SA
1203-003643	U612	IC-MULTI REG.	SA
1006-001322	U701	IC-LINE TRANSCEIVER	SA
0801-002321	U900	IC-CMOS LOGIC	SA
1203-004956	U903	IC-DC/DC CONVERTER	SA
1205-003215	UCP201	IC-MODEM	SA
0904-002295	UCP800	IC-DSP	SA
1108-000127	UME200	IC-MCP	SA
1106-001511	UME900	IC-SRAM	SA
0406-001223	ZD501	DIODE-TVS	SA
0406-001223	ZD502	DIODE-TVS	SA
0406-001223	ZD503	DIODE-TVS	SA
0406-001223	ZD504	DIODE-TVS	SA
0406-001223	ZD505	DIODE-TVS	SA
0406-001223	ZD506	DIODE-TVS	SA
0406-001223	ZD507	DIODE-TVS	SA
0406-001223	ZD600	DIODE-TVS	SA
0406-001223	ZD601	DIODE-TVS	SA
0406-001197	ZD609	DIODE-TVS	SA
0406-001197	ZD610	DIODE-TVS	SA
0406-001190	ZD700	DIODE-TVS	SA
0406-001190	ZD701	DIODE-TVS	SA
0406-001223	ZD702	DIODE-TVS	SA
0406-001223	ZD703	DIODE-TVS	SA
0406-001223	ZD704	DIODE-TVS	SA
0406-001223	ZD705	DIODE-TVS	SA
0406-001223	ZD706	DIODE-TVS	SA
0406-001223	ZD707	DIODE-TVS	SA
0406-001223	ZD708	DIODE-TVS	SA
0406-001223	ZD709	DIODE-TVS	SA
1108-000050		IC-MCP	SA

Please consult the GSPN website (Samsung Portal) for the most recent version of the product's part list.

SAMSUNG Proprietary-Contents may change without notice
This Document can not be used without Samsung's authorization

7. Block Diagrams

7-1. Base Band Solution Block Diagram

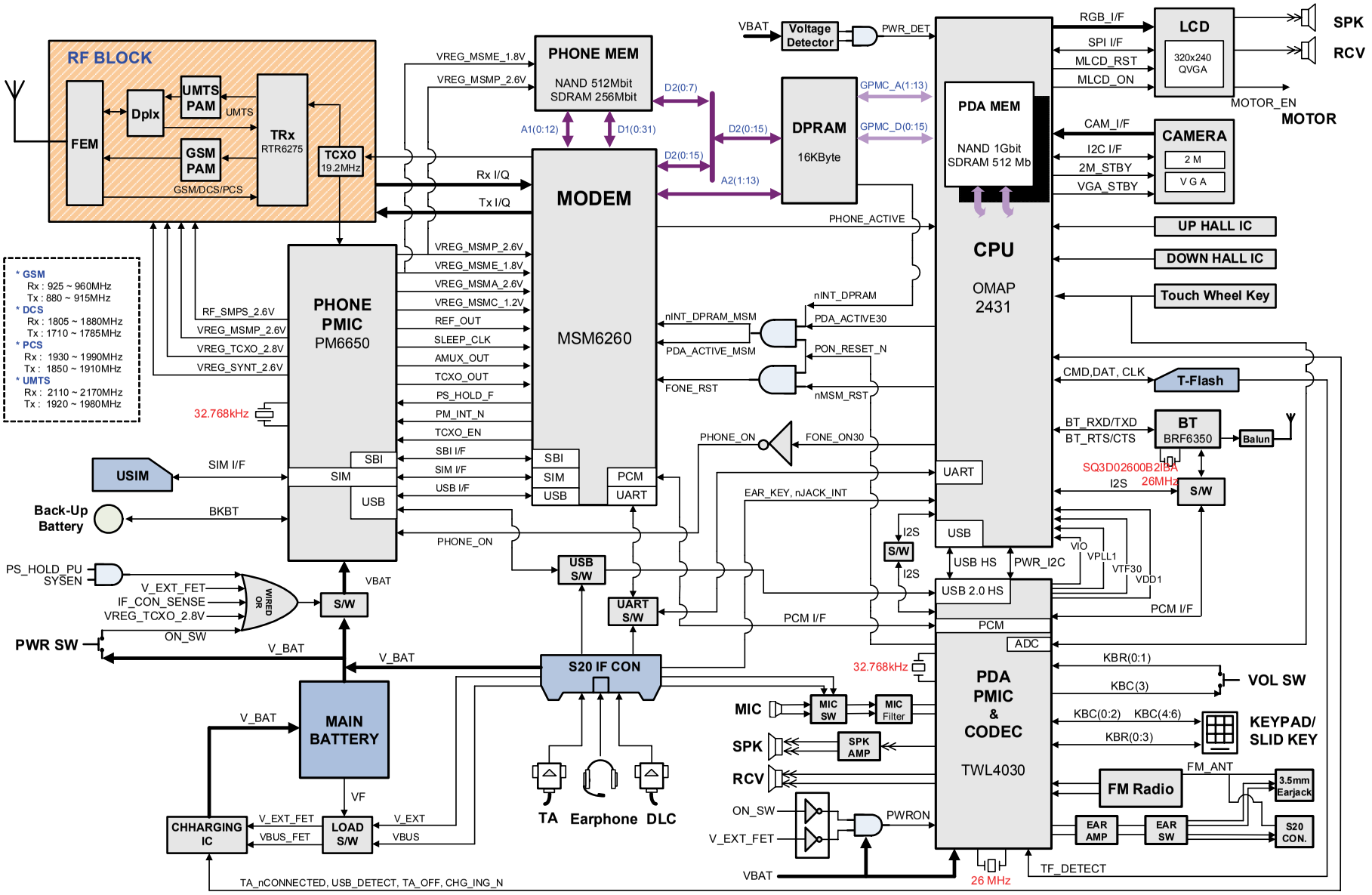

SAMSUNG Proprietary-Contents may change without notice
This Document can not be used without Samsung's authorization

7-2. RF Solution Block Diagram

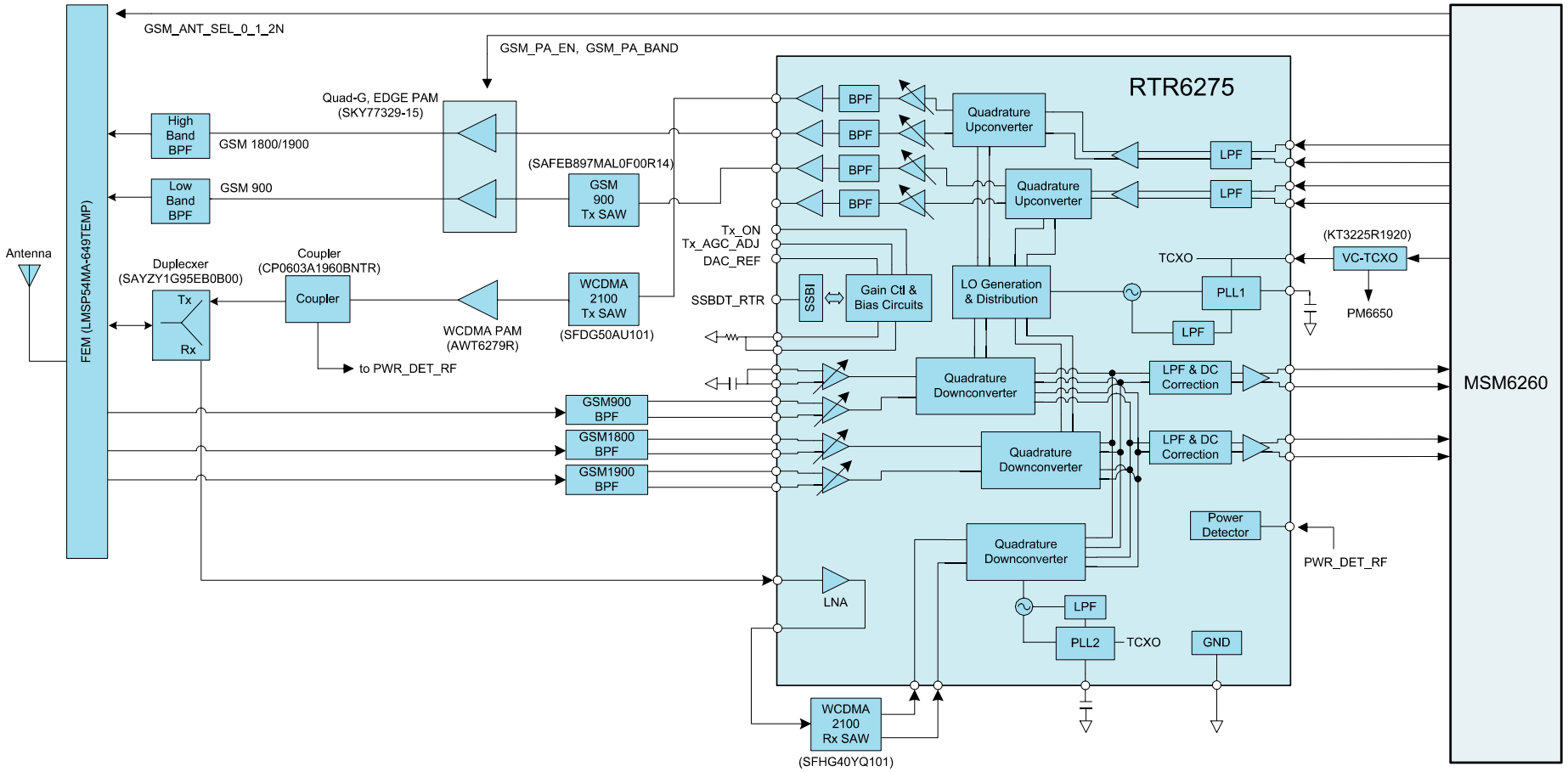

SAMSUNG Proprietary-Contents may change without notice
This Document can not be used without Samsung's authorization

8. PCB Diagrams

- Main Top

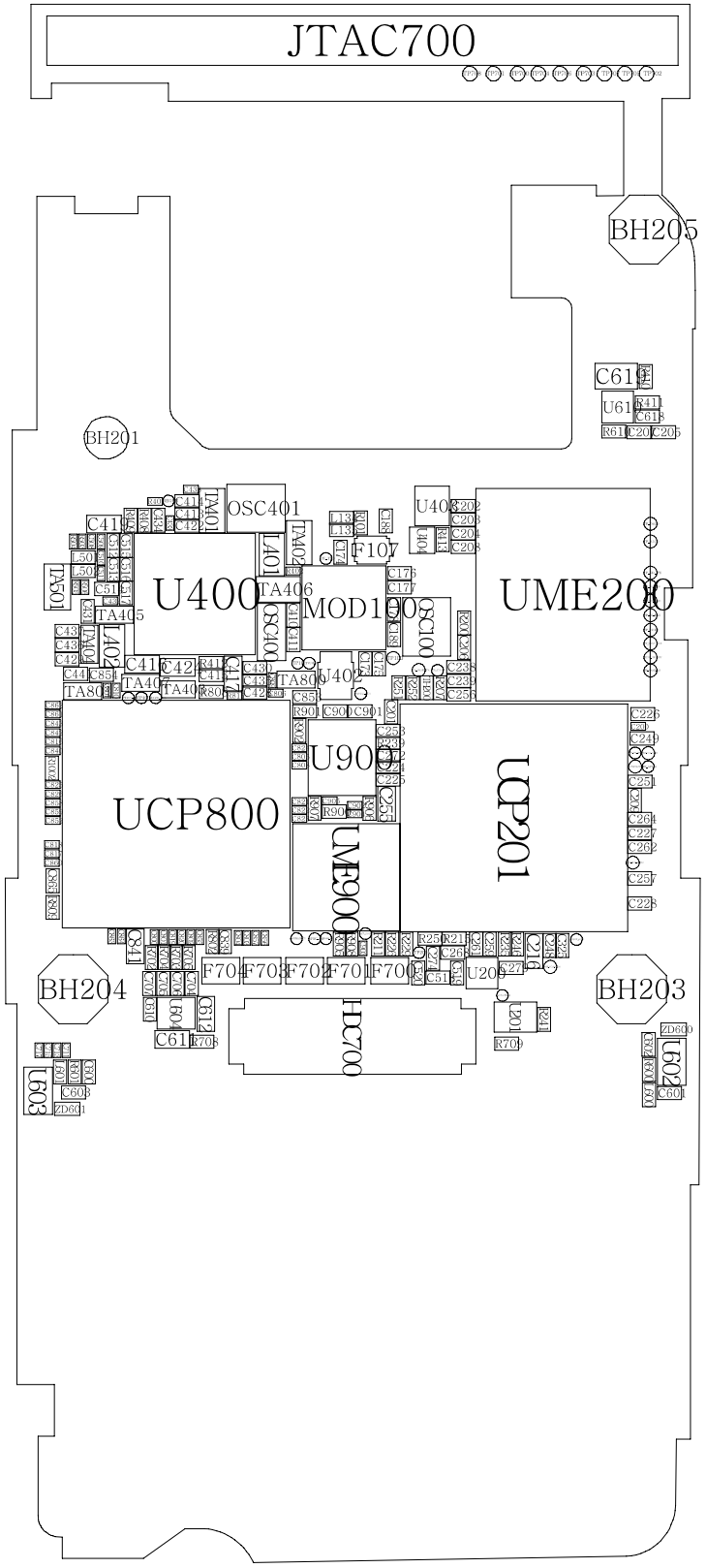

SAMSUNG Proprietary-Contents may change without notice
This Document can not be used without Samsung's authorization

- Main Bottom

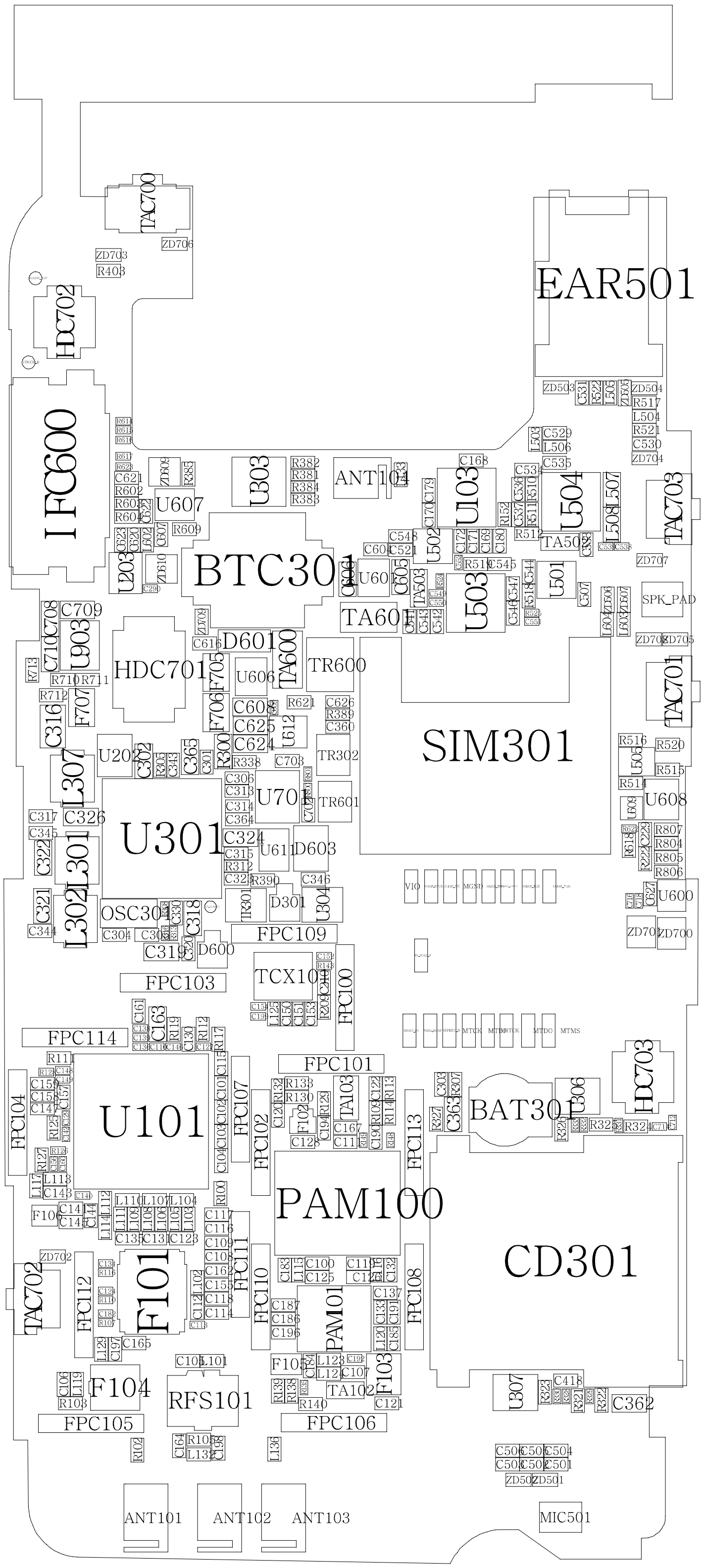

SAMSUNG Proprietary-Contents may change without notice
This Document can not be used without Samsung's authorization

9. Flow Chart of Troubleshooting

9-1. Power On operation

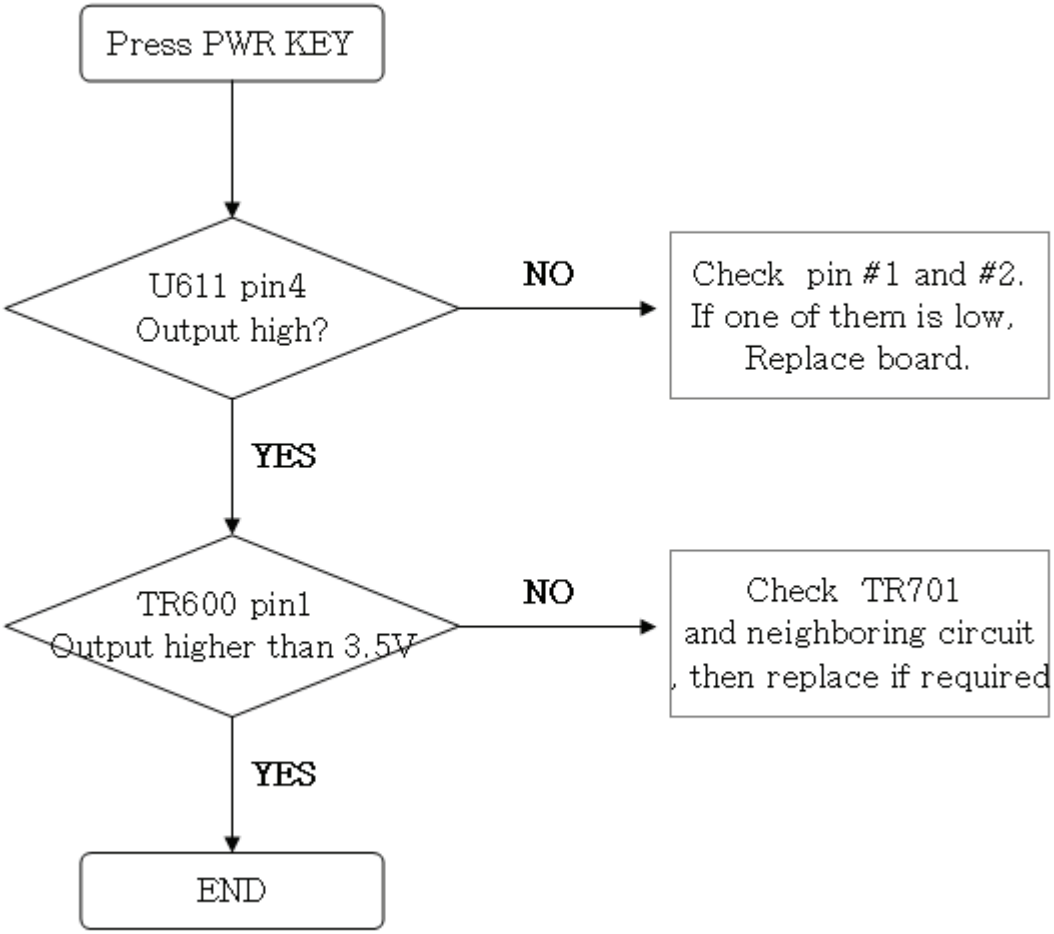

SAMSUNG Proprietary-Contents may change without notice
This Document can not be used without Samsung's authorization

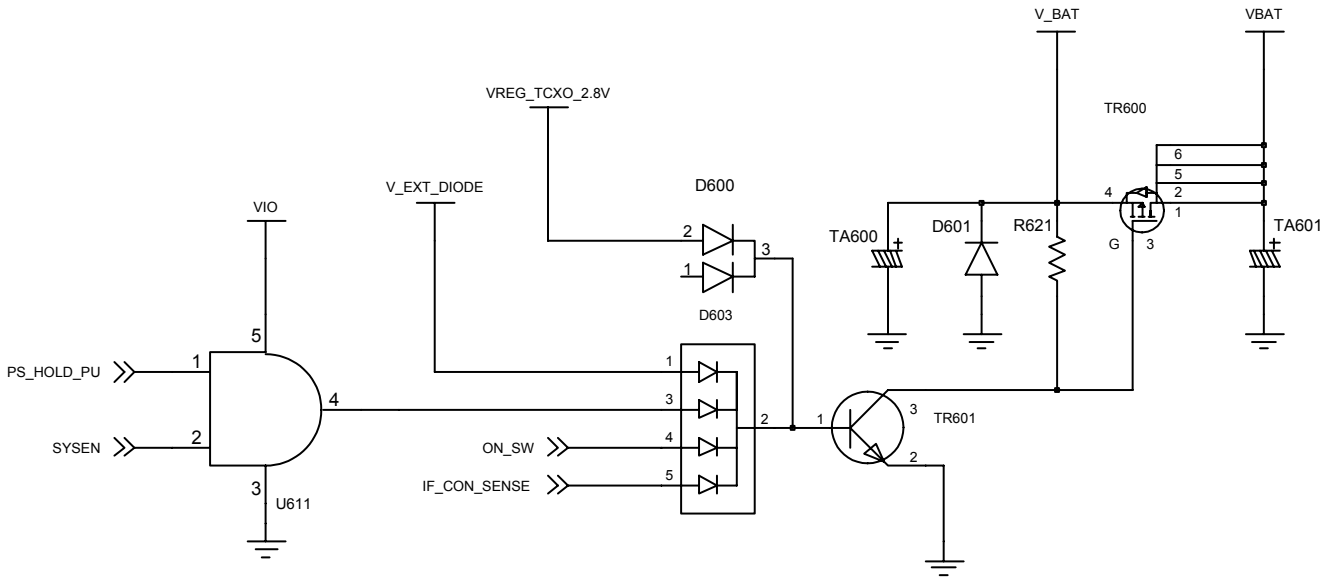

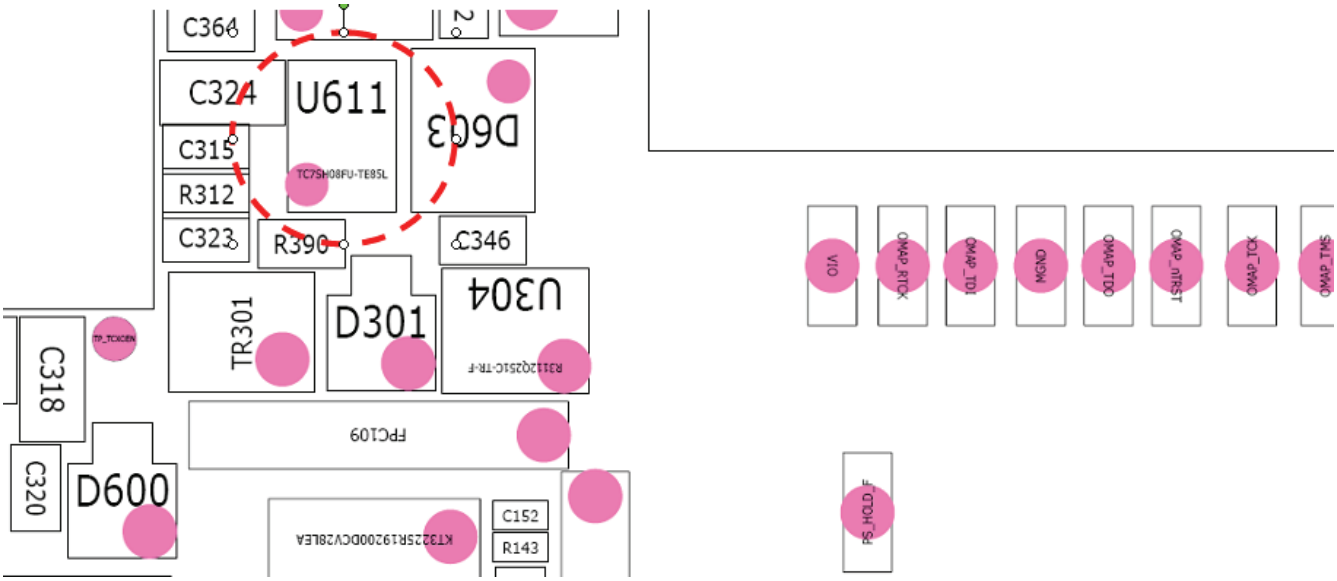

SAMSUNG Proprietary-Contents may change without notice
This Document can not be used without Samsung's authorization

9-2. Initial Operation

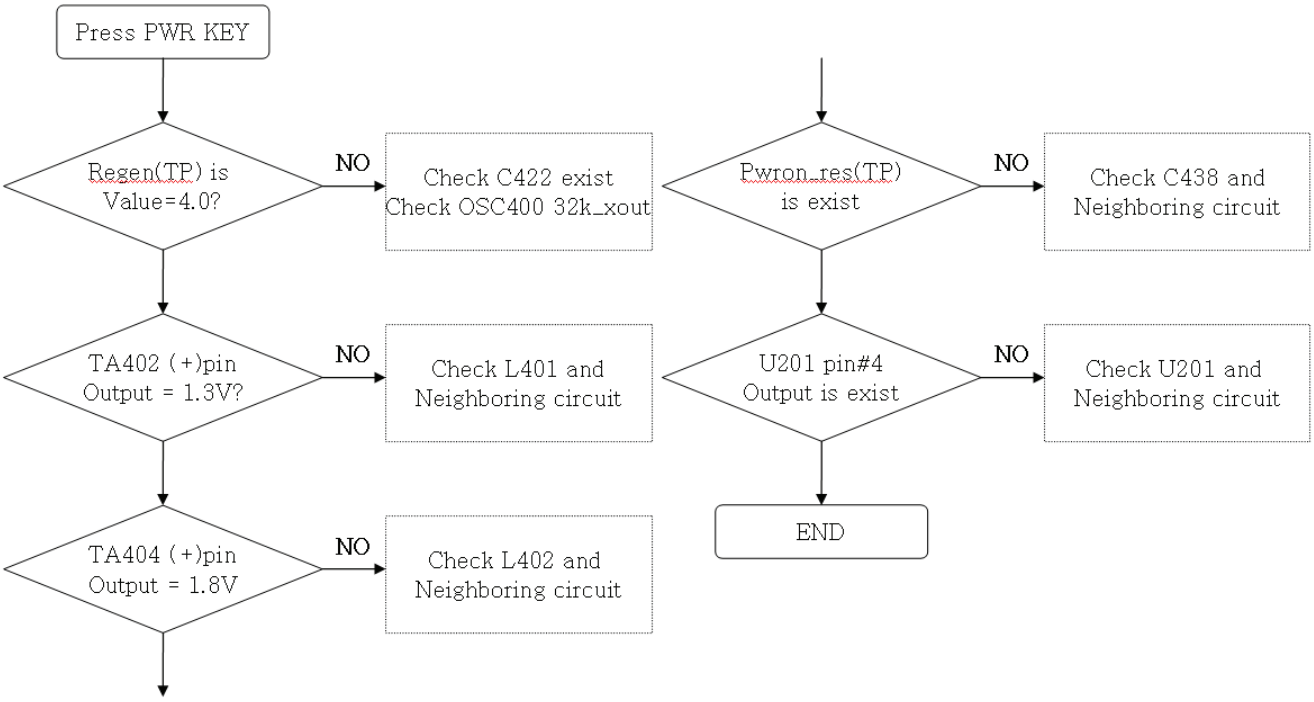

SAMSUNG Proprietary-Contents may change without notice
This Document can not be used without Samsung's authorization

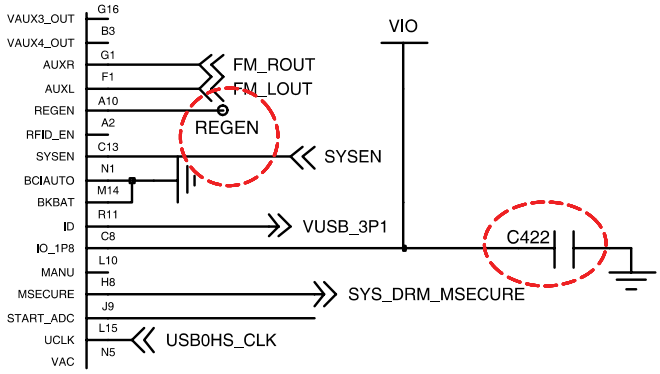

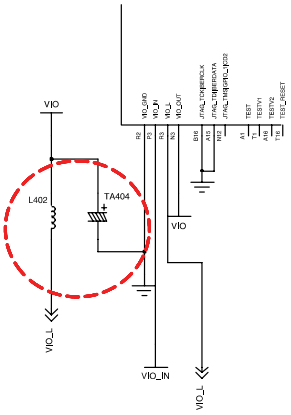

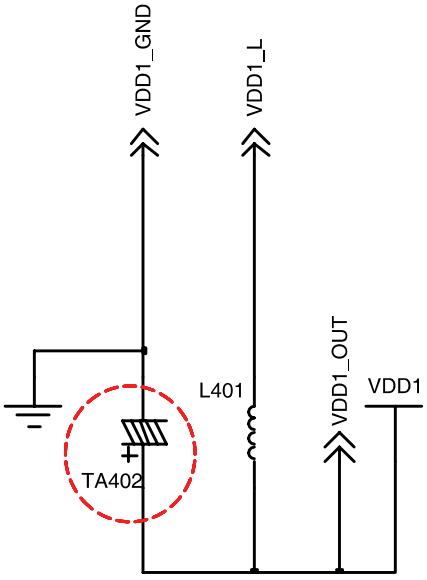

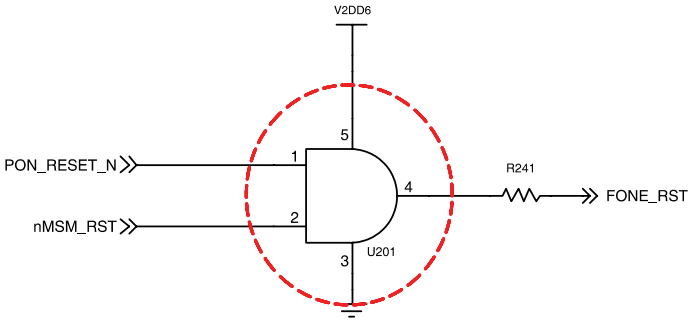

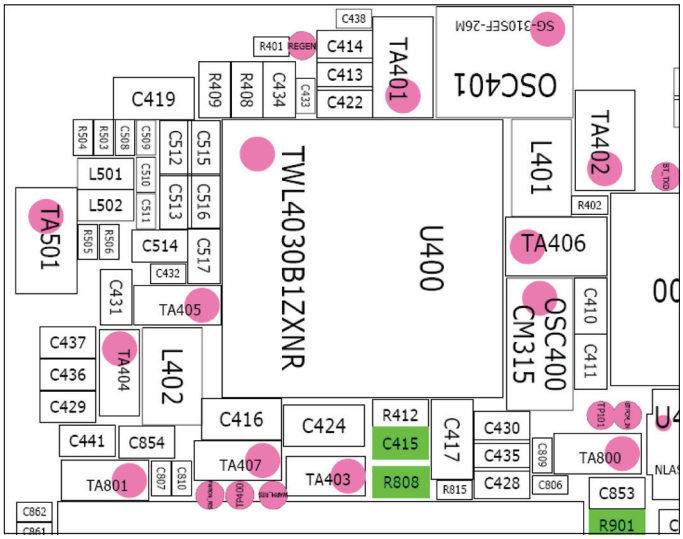

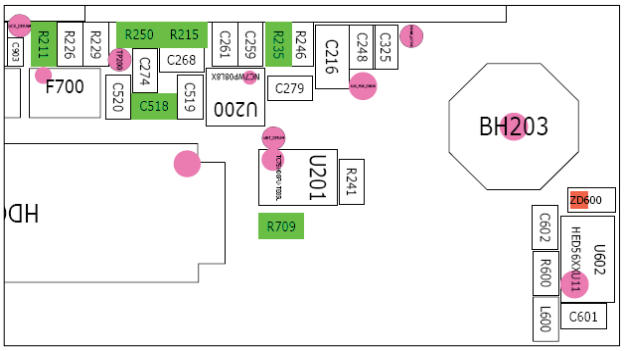

SAMSUNG Proprietary-Contents may change without notice
This Document can not be used without Samsung's authorization

9-3. Sound Operation

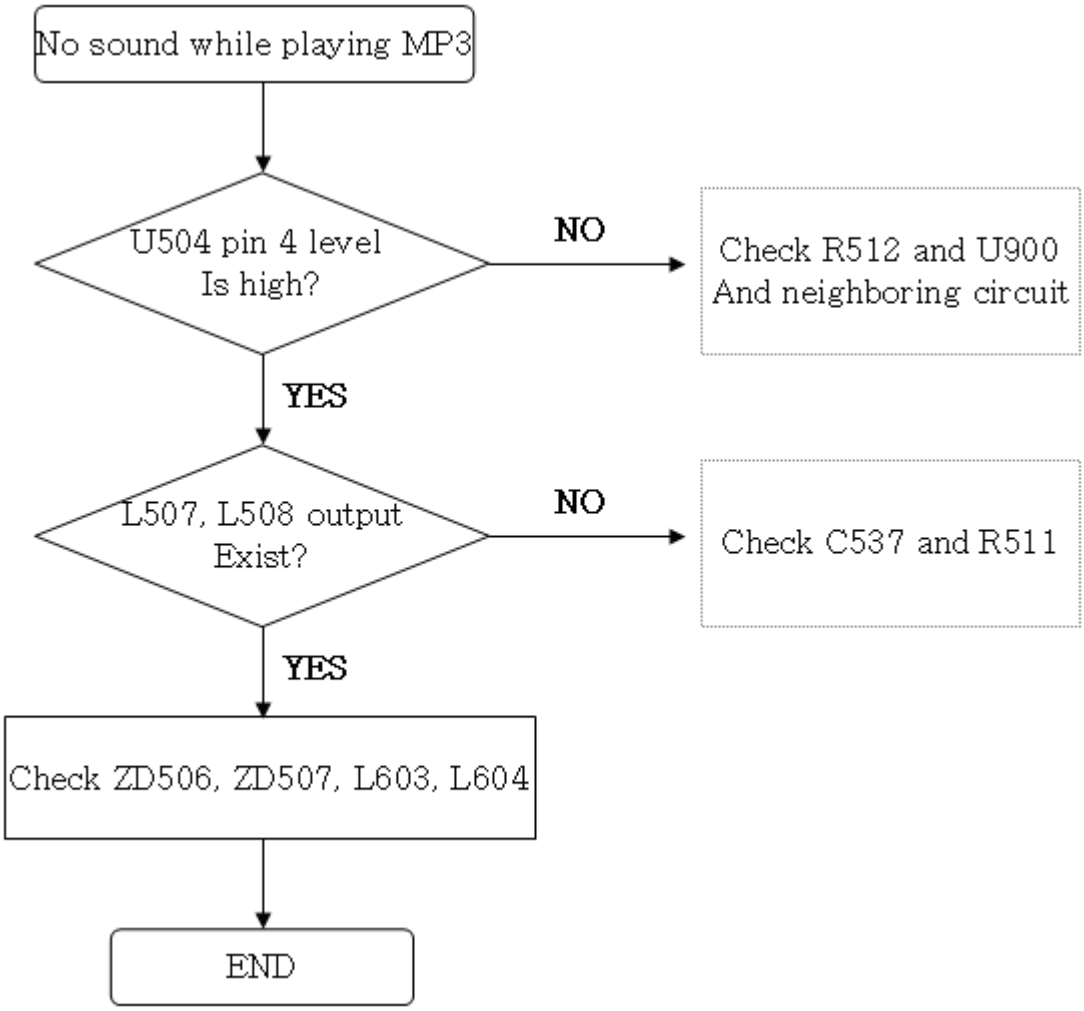

SAMSUNG Proprietary-Contents may change without notice
This Document can not be used without Samsung's authorization

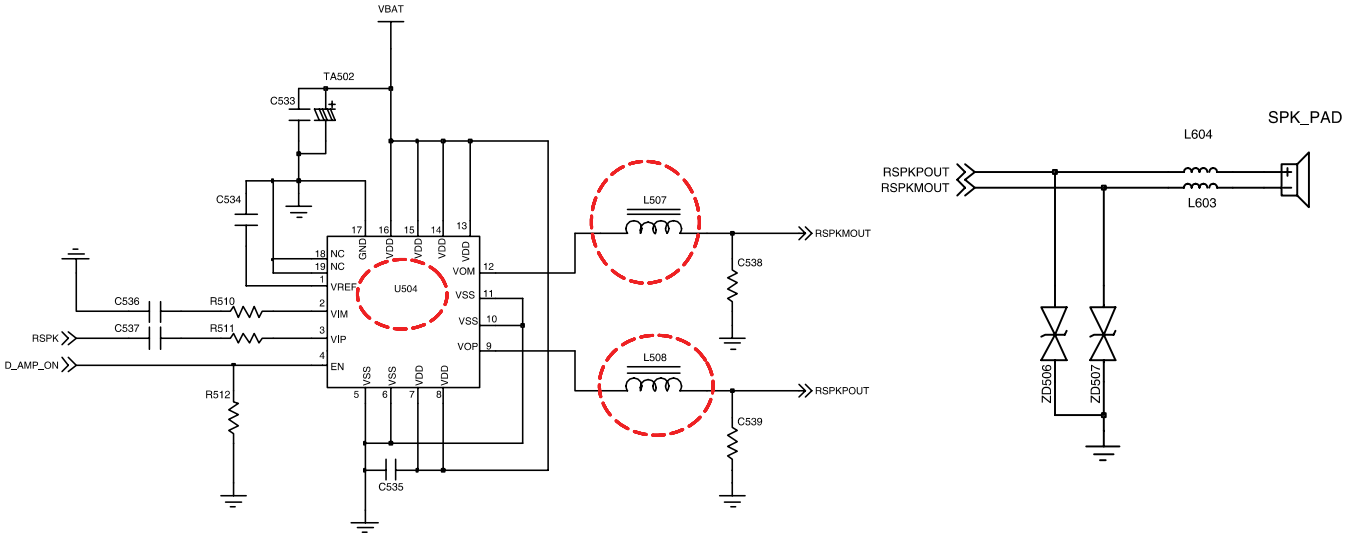

<SPK AMP>

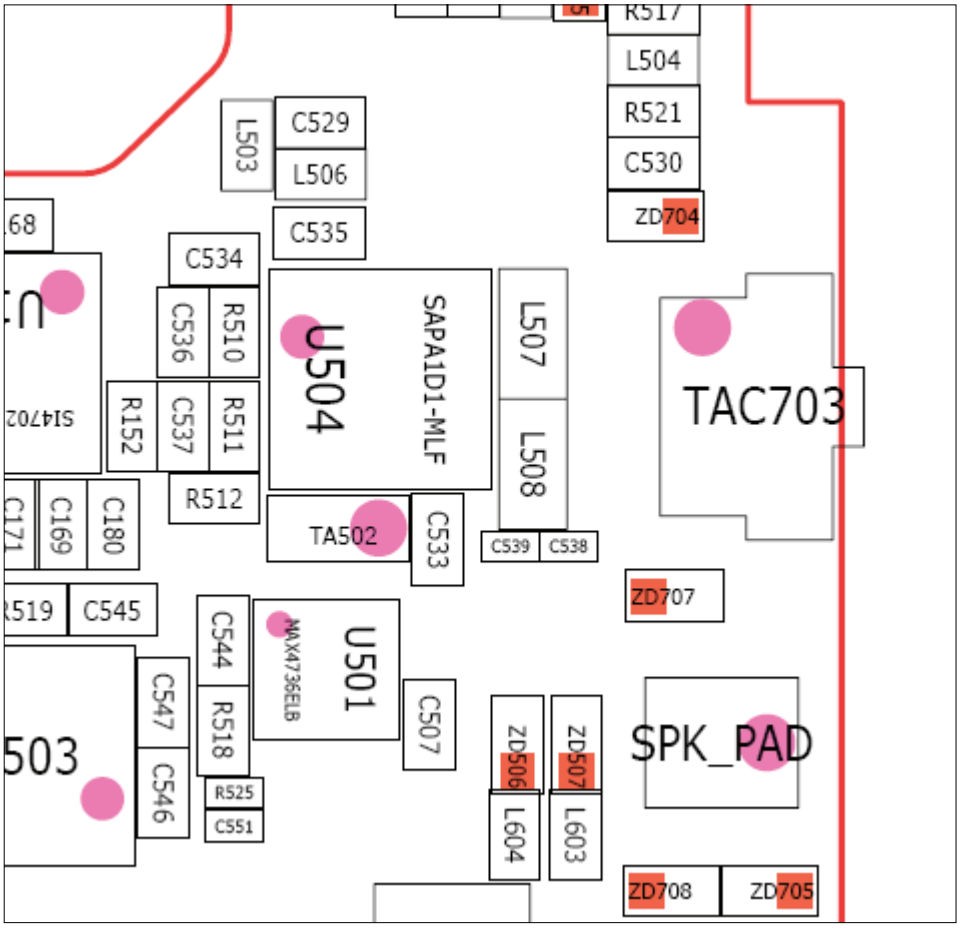

SAMSUNG Proprietary-Contents may change without notice
This Document can not be used without Samsung's authorization

9-4. Sound On Calling

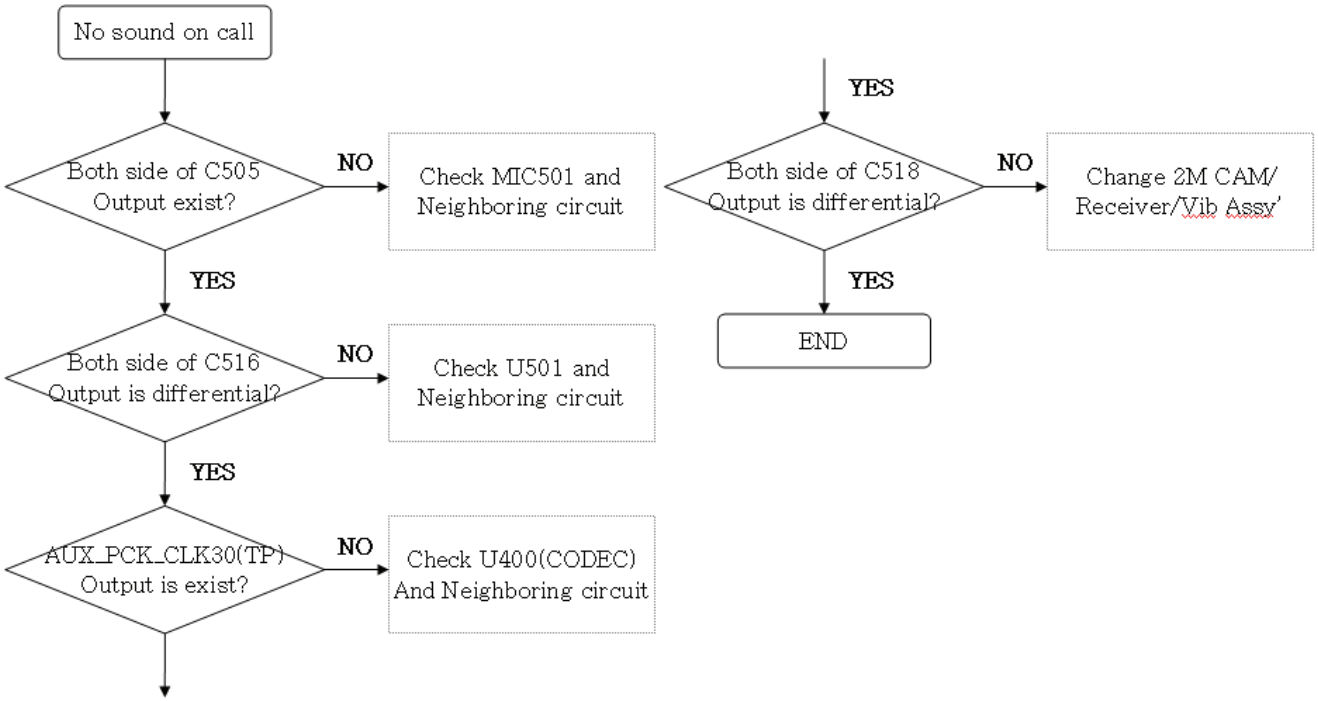

SAMSUNG Proprietary-Contents may change without notice
This Document can not be used without Samsung's authorization

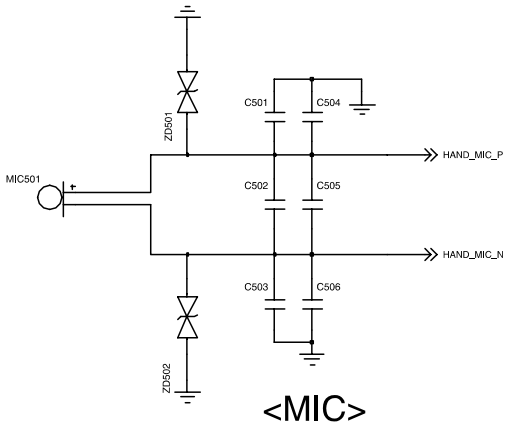

<MIC>

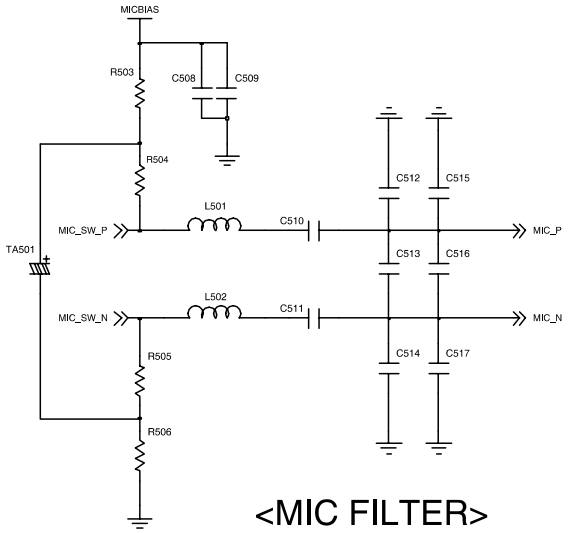

<MIC FILTER>

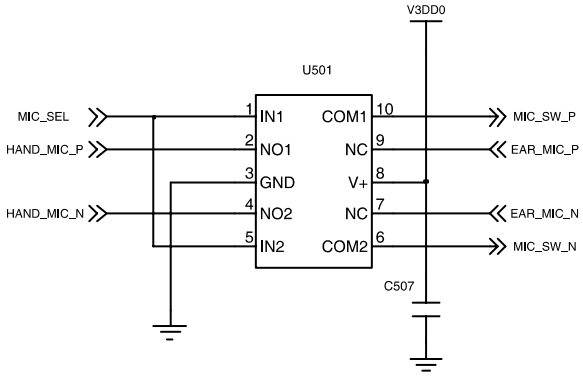

<MIC SW>

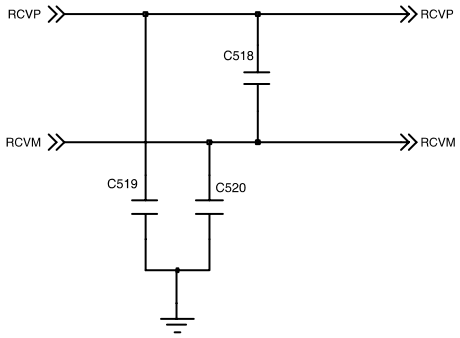

<RECEIVER>

SAMSUNG Proprietary-Contents may change without notice
This Document can not be used without Samsung's authorization

9-5. Camera

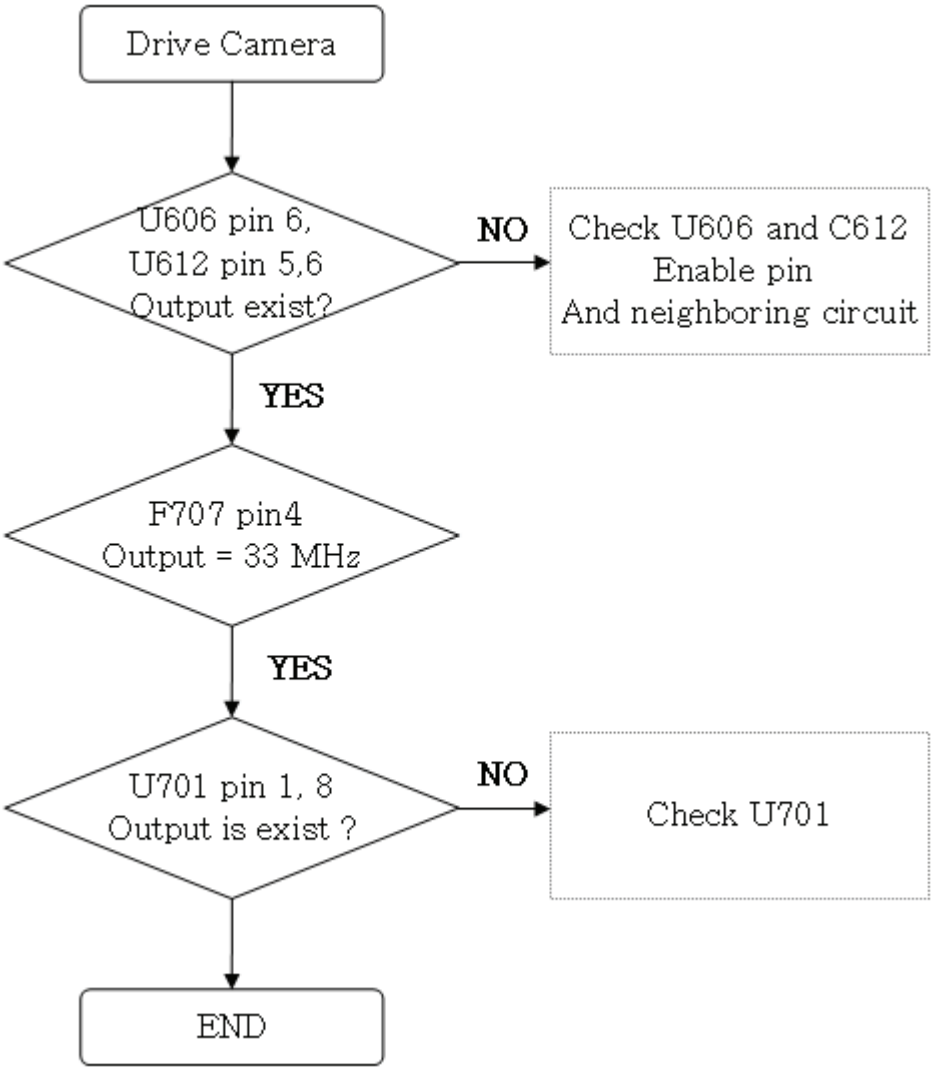

SAMSUNG Proprietary-Contents may change without notice
This Document can not be used without Samsung's authorization

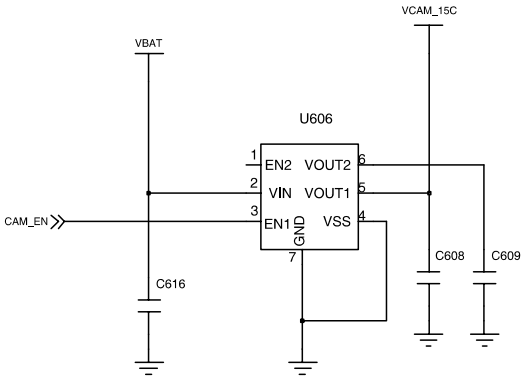

<CAM + TOUCH LDO>

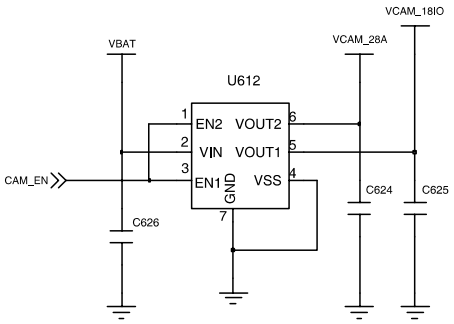

<CAM LDO>

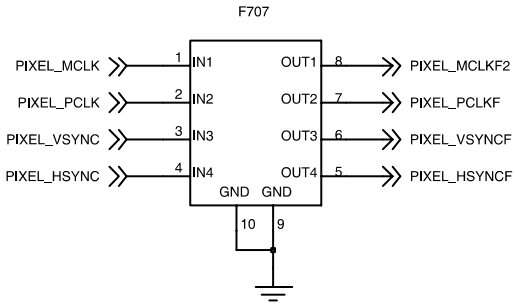

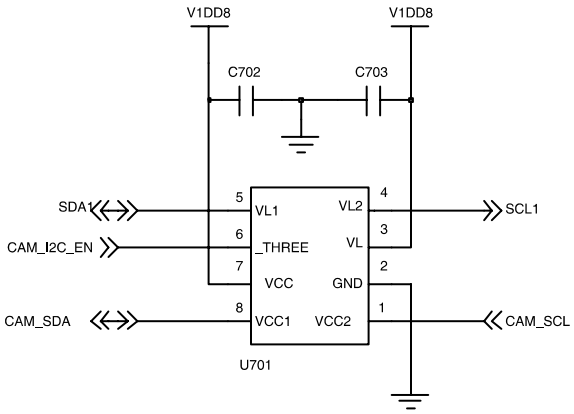

<CAM LEVEL TRANSLATOR>

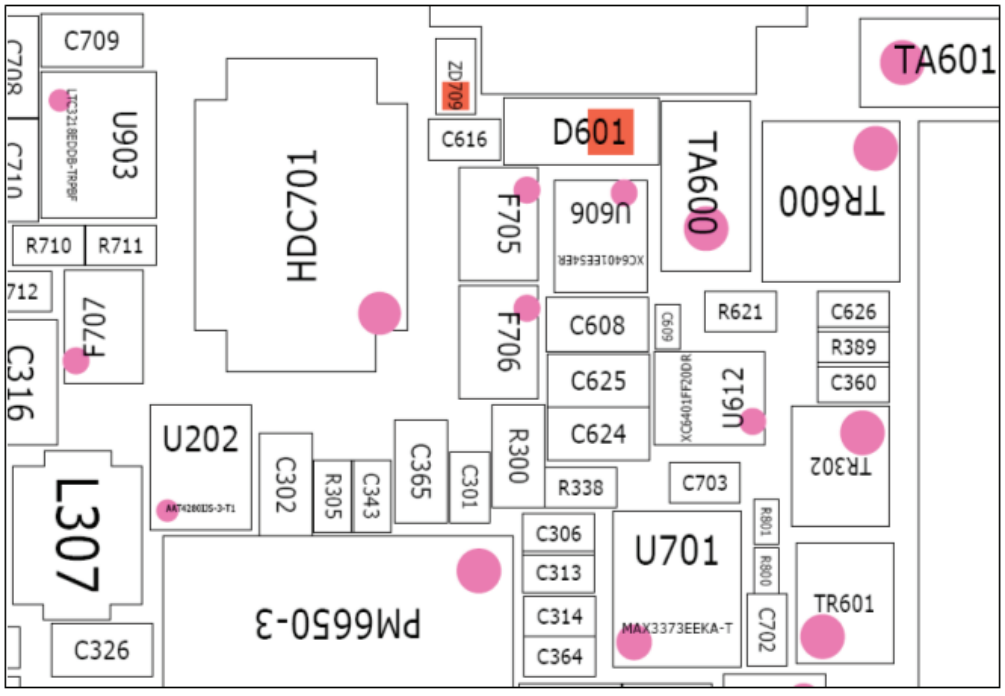

SAMSUNG Proprietary-Contents may change without notice
This Document can not be used without Samsung's authorization

9-6. Touch-Wheel

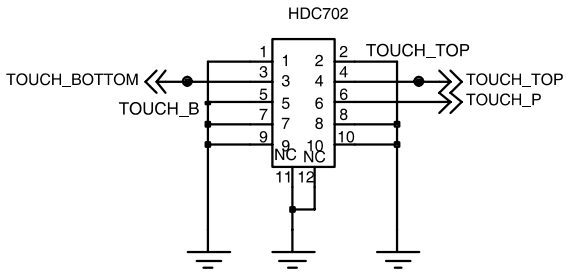

<TOUCH WHEEL CON.>

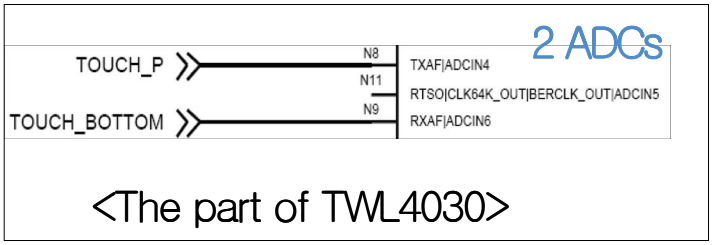

<The part of TWL4030>

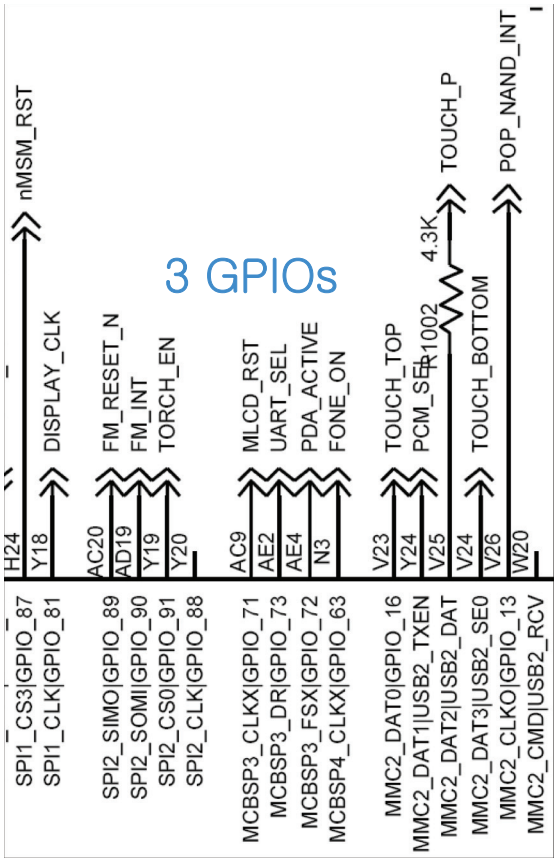

< The part of OMAP2431 >

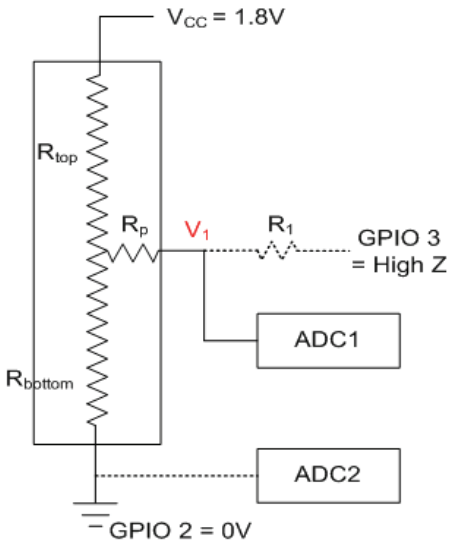

<Position sensing>

-Detecting V_1, the position is determined

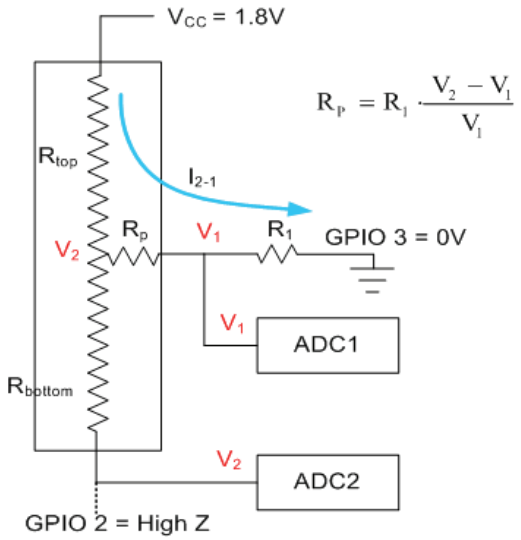

<Force sensing>

- With the force level, the R_P is changed

SAMSUNG Proprietary-Contents may change without notice
This Document can not be used without Samsung's authorization

9-7. 3X4 Key

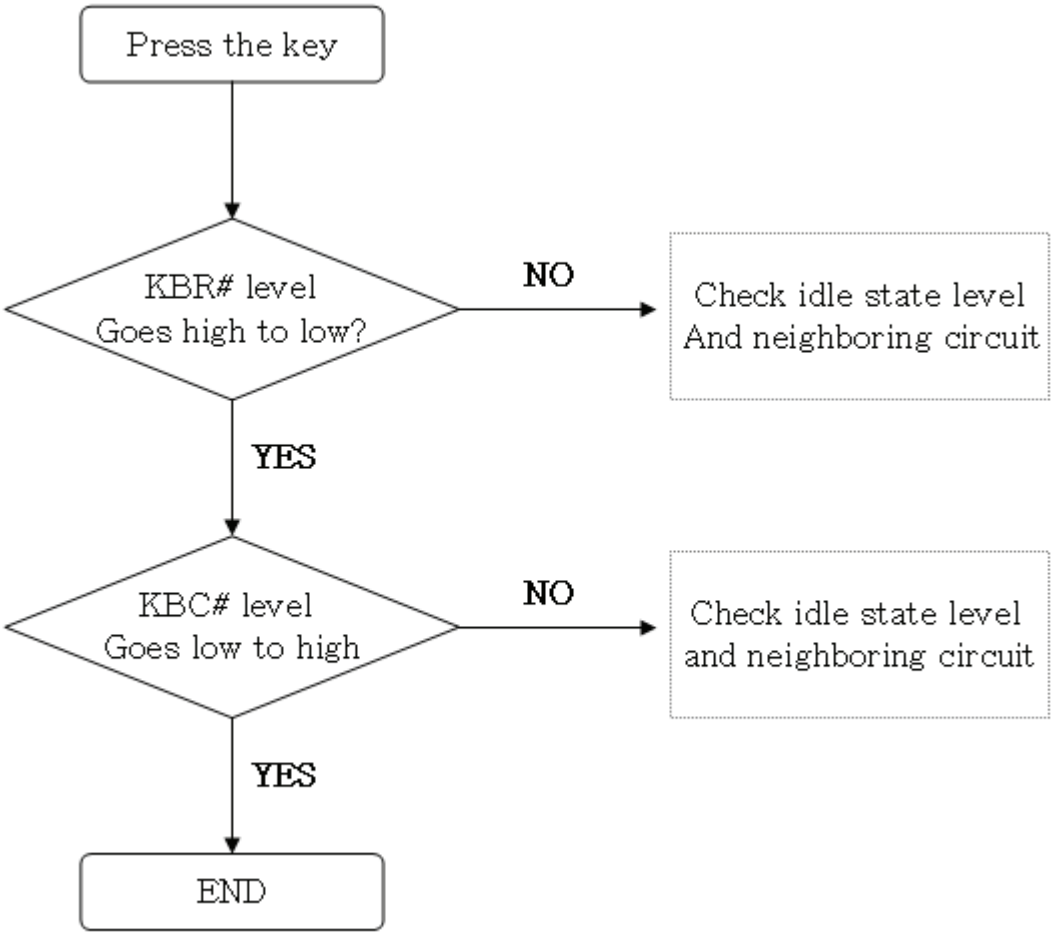

SAMSUNG Proprietary-Contents may change without notice
This Document can not be used without Samsung's authorization

9-8. Micro SD card

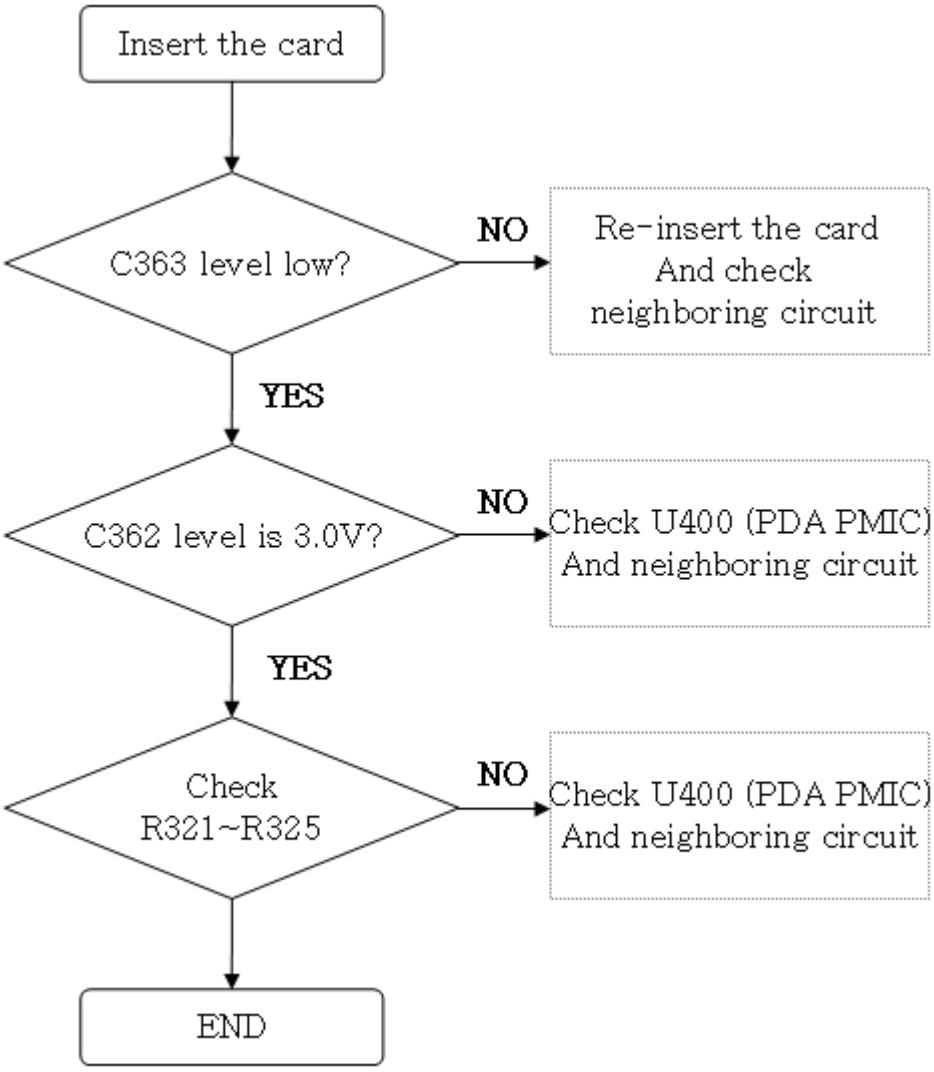

SAMSUNG Proprietary-Contents may change without notice
This Document can not be used without Samsung's authorization

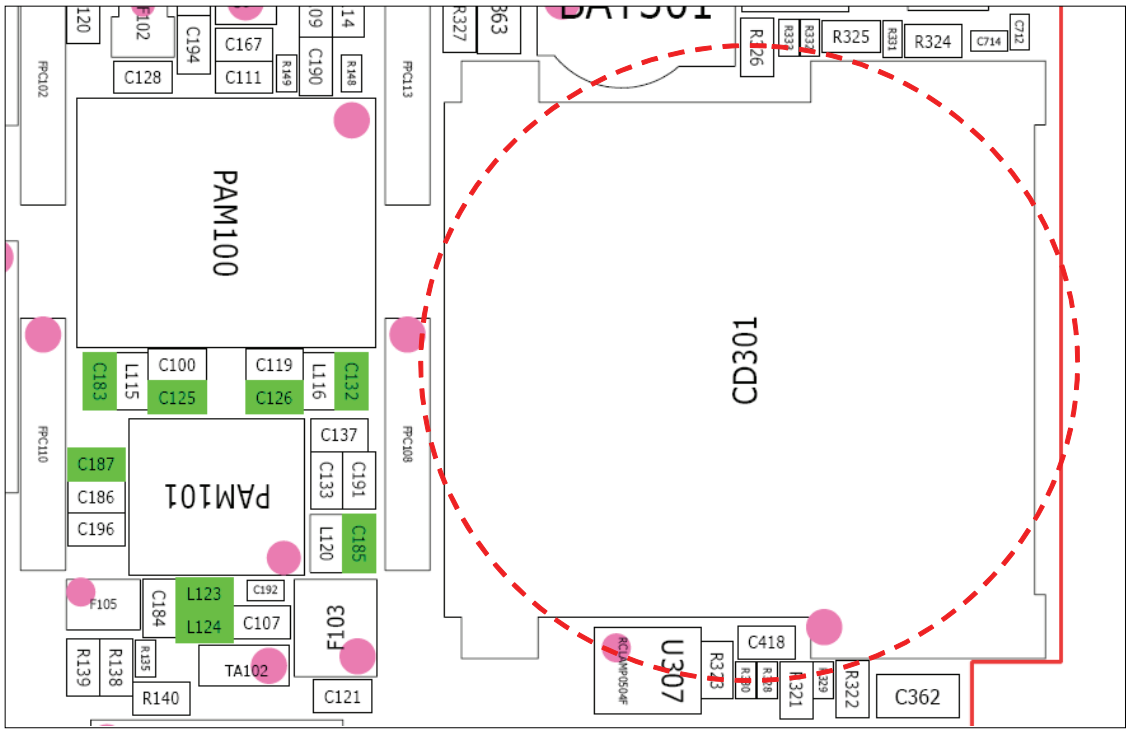

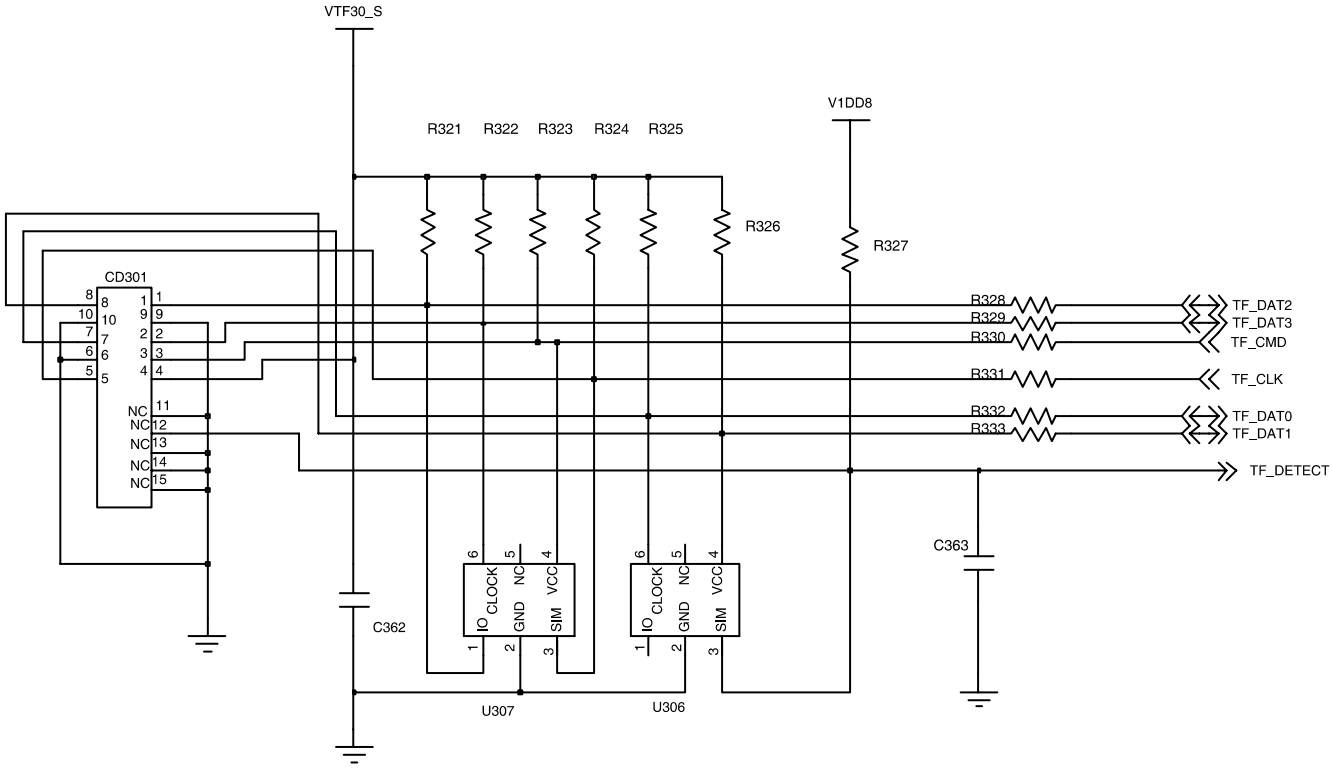

T-FLASH

SAMSUNG Proprietary-Contents may change without notice
This Document can not be used without Samsung's authorization

9-9. LCD

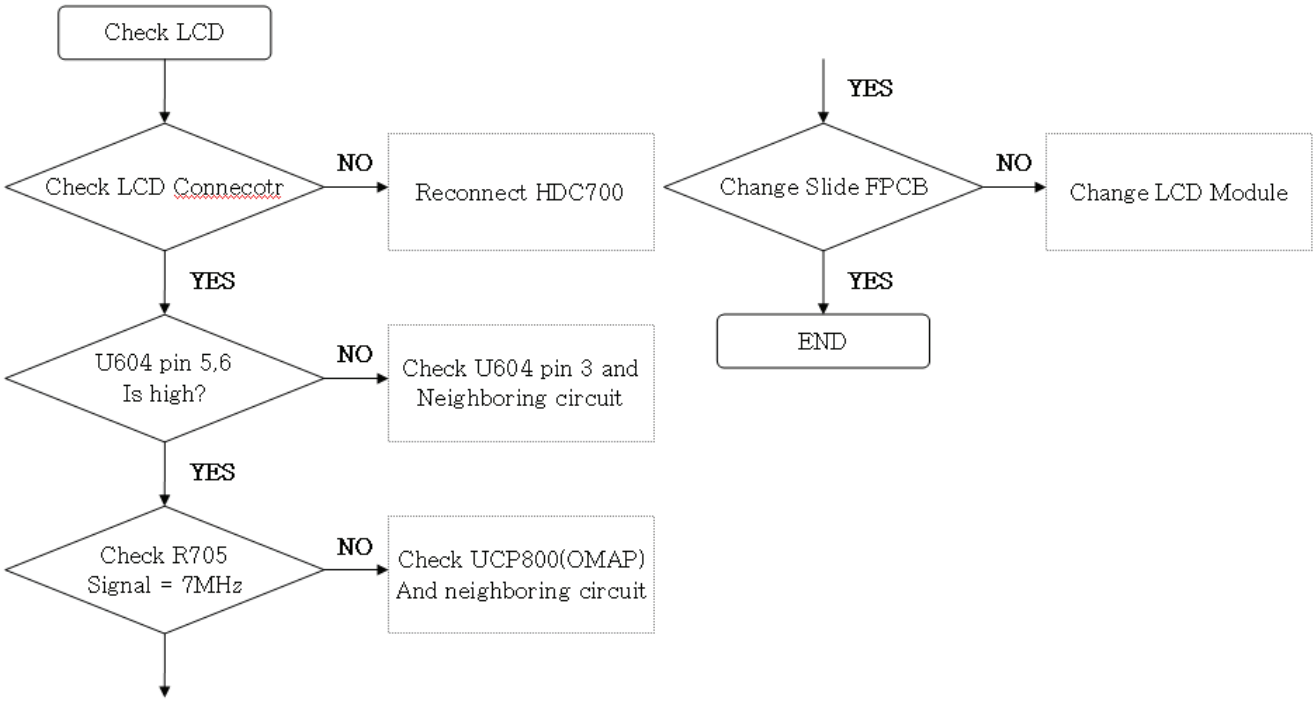

SAMSUNG Proprietary-Contents may change without notice
This Document can not be used without Samsung's authorization

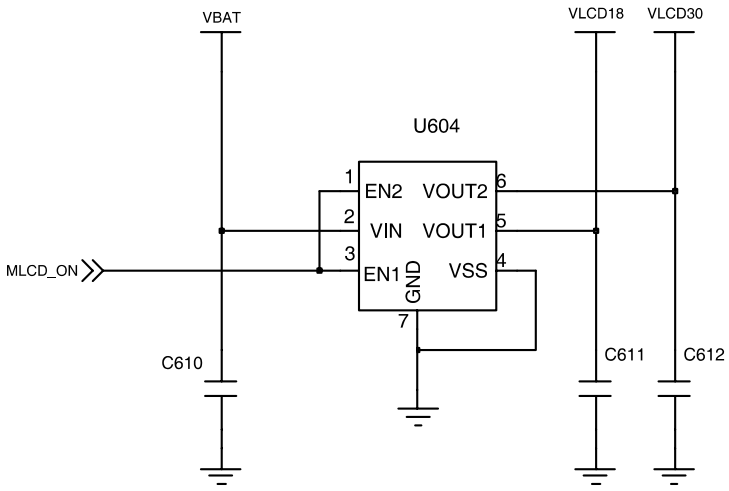

<LCD LDO>

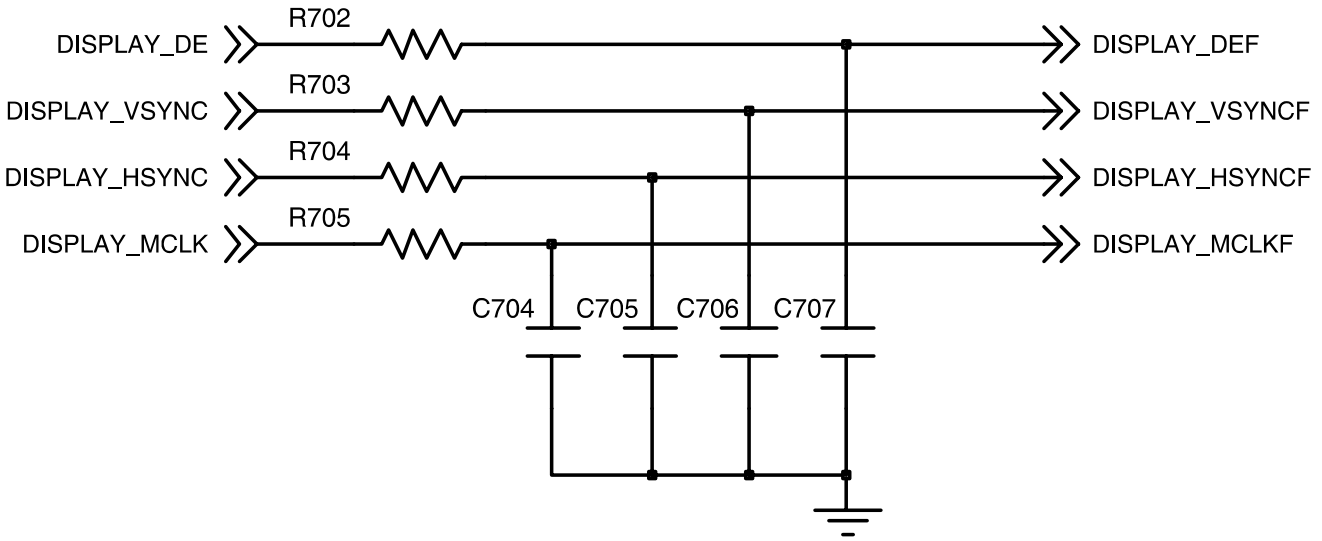

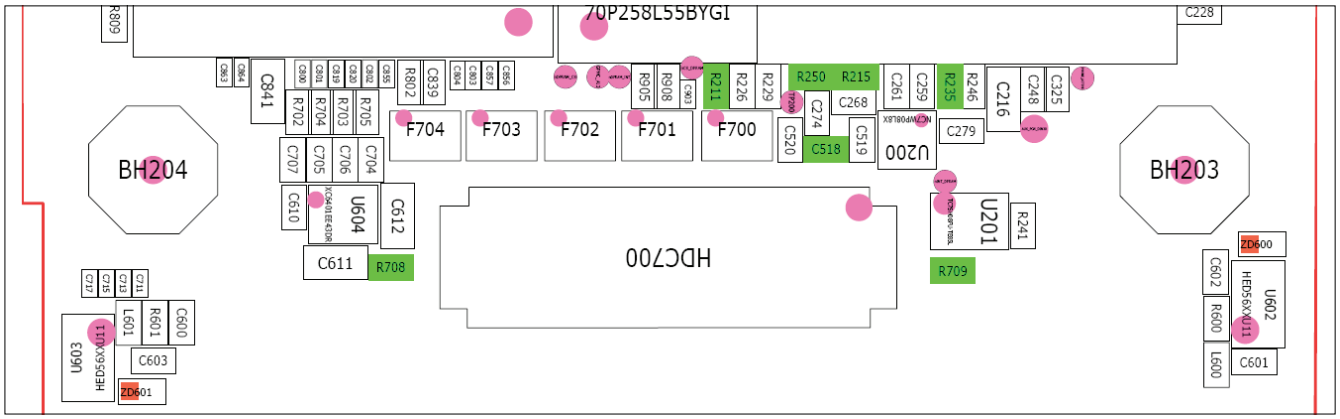

SAMSUNG Proprietary-Contents may change without notice
This Document can not be used without Samsung's authorization

9-10. BT

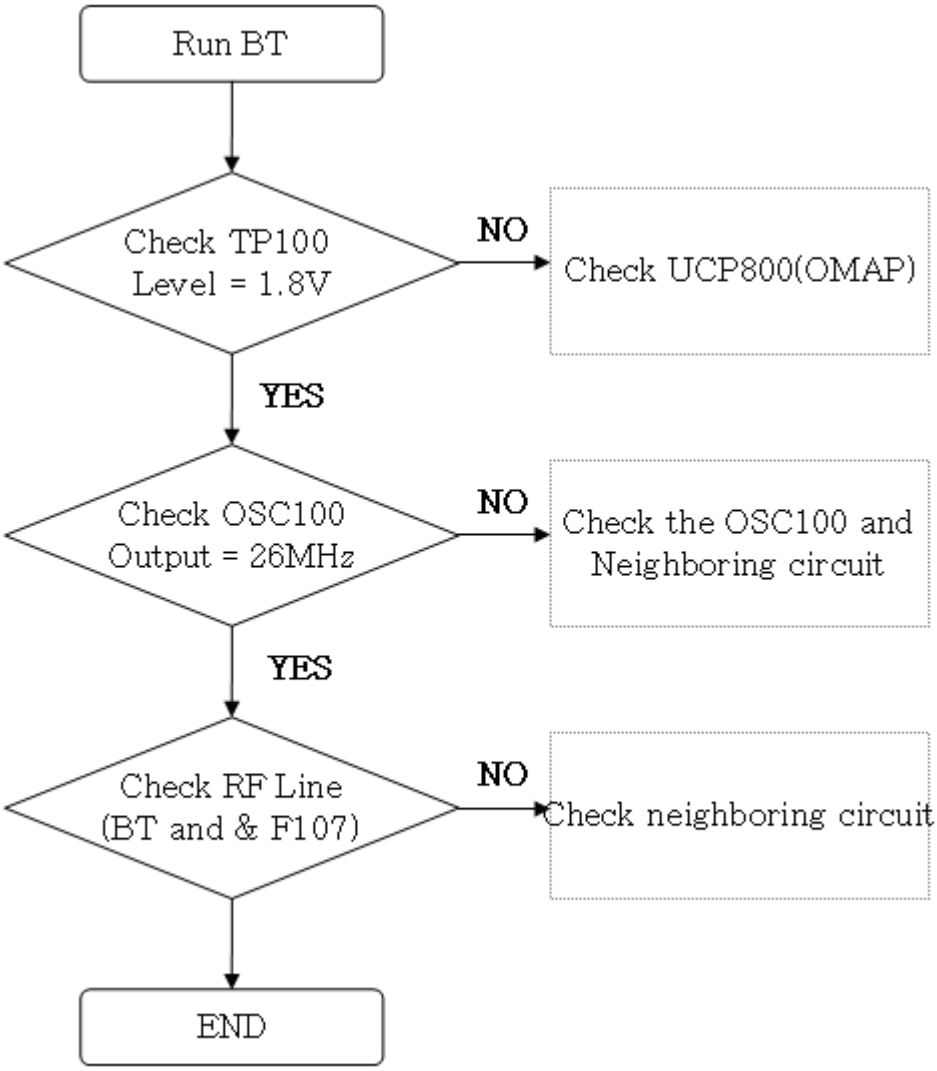

SAMSUNG Proprietary-Contents may change without notice
This Document can not be used without Samsung's authorization

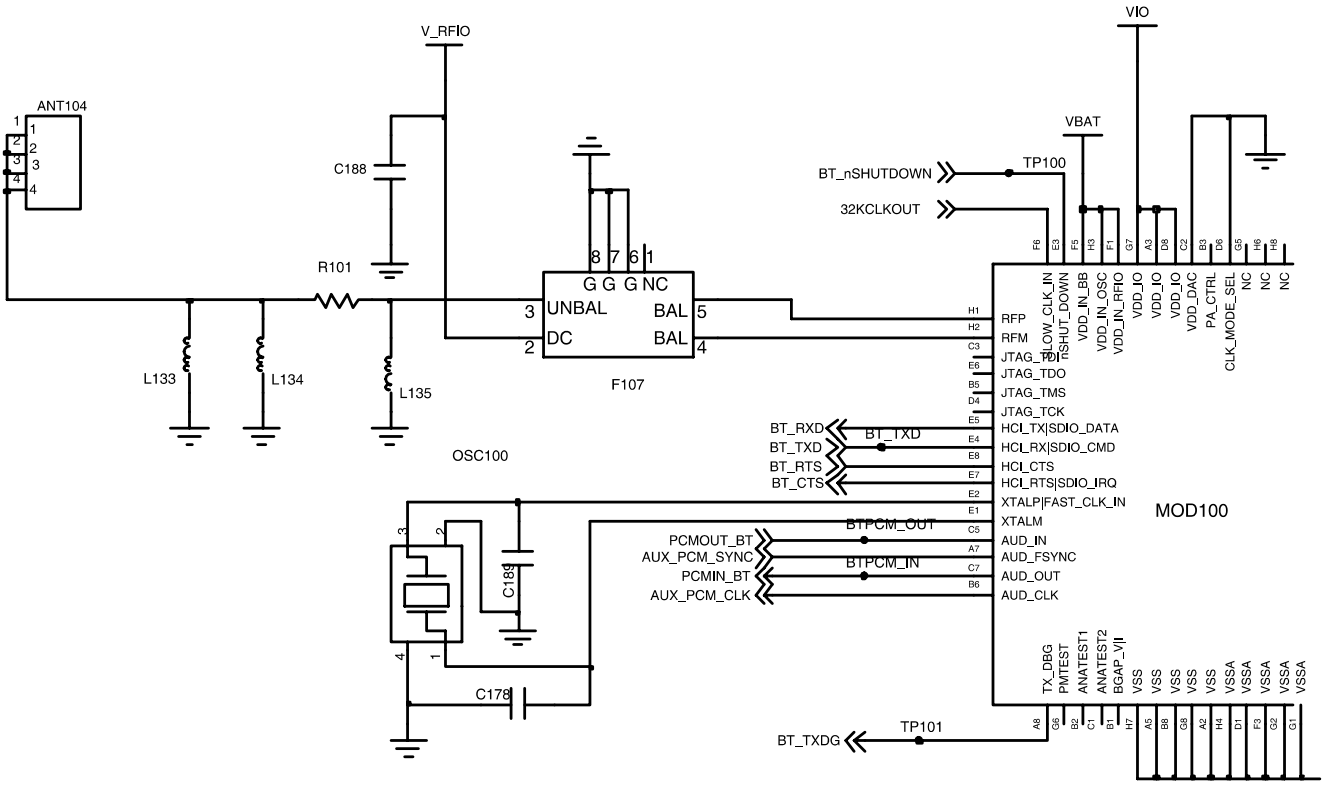

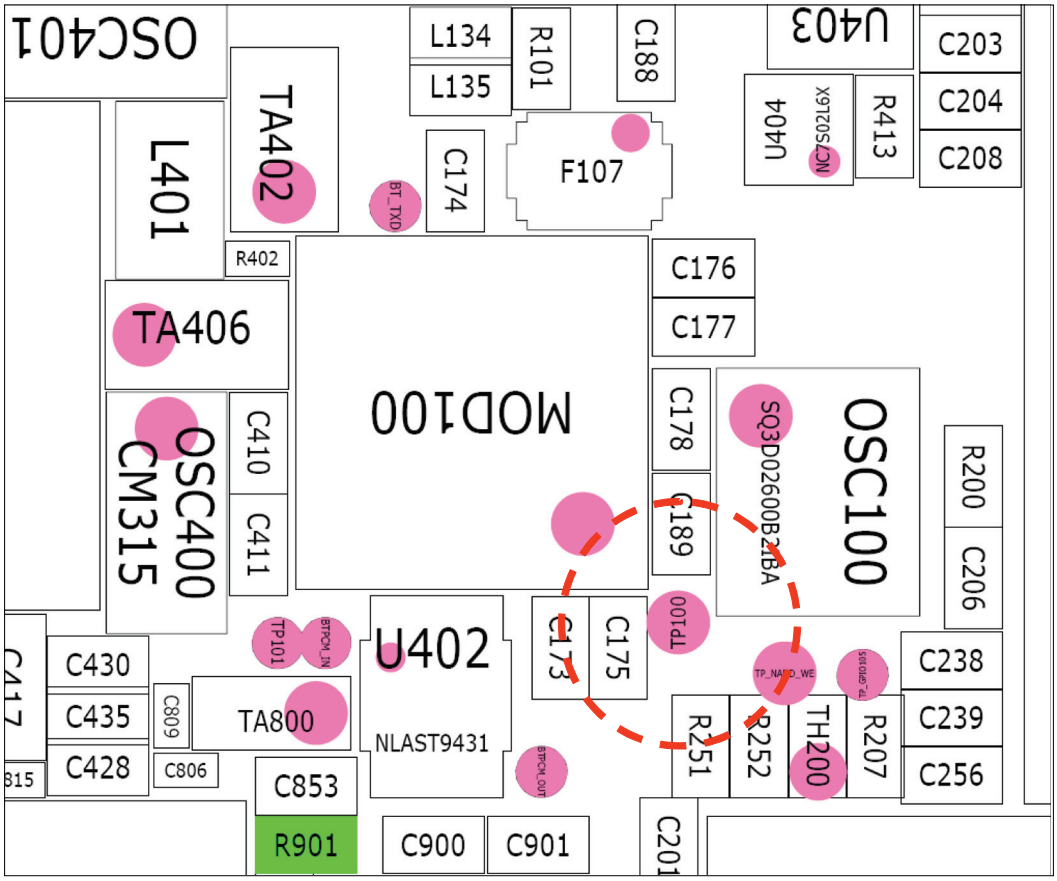

SAMSUNG Proprietary-Contents may change without notice
This Document can not be used without Samsung's authorization

9-11. Slide up/down

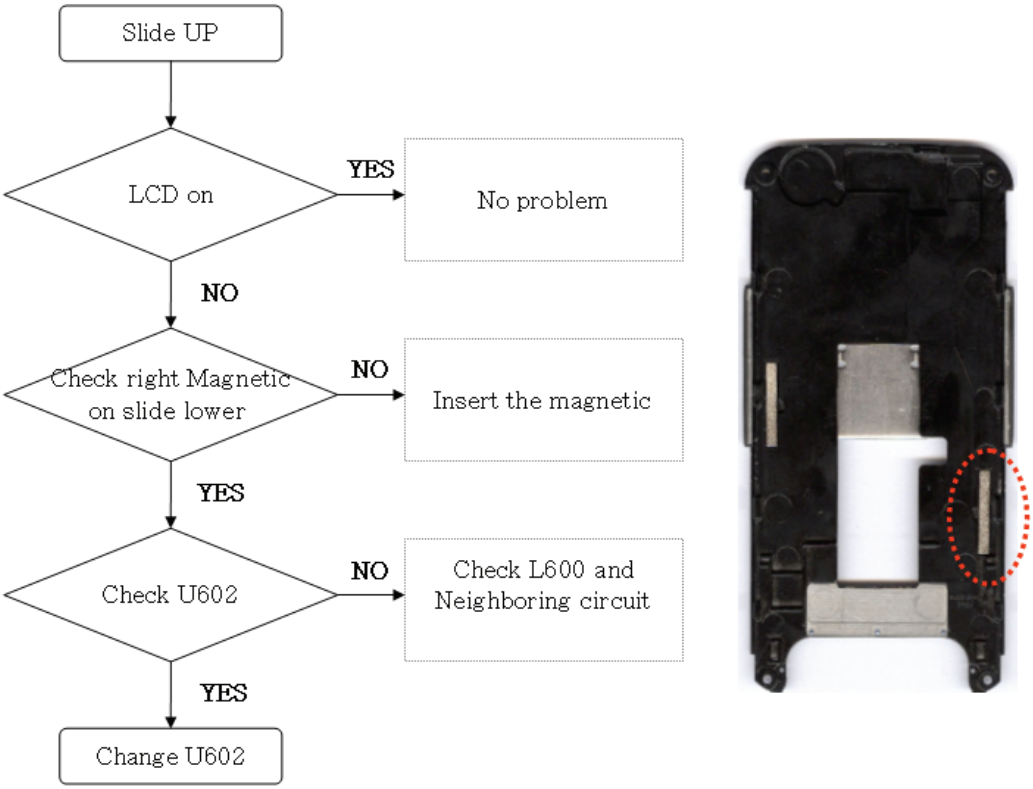

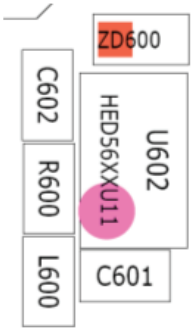

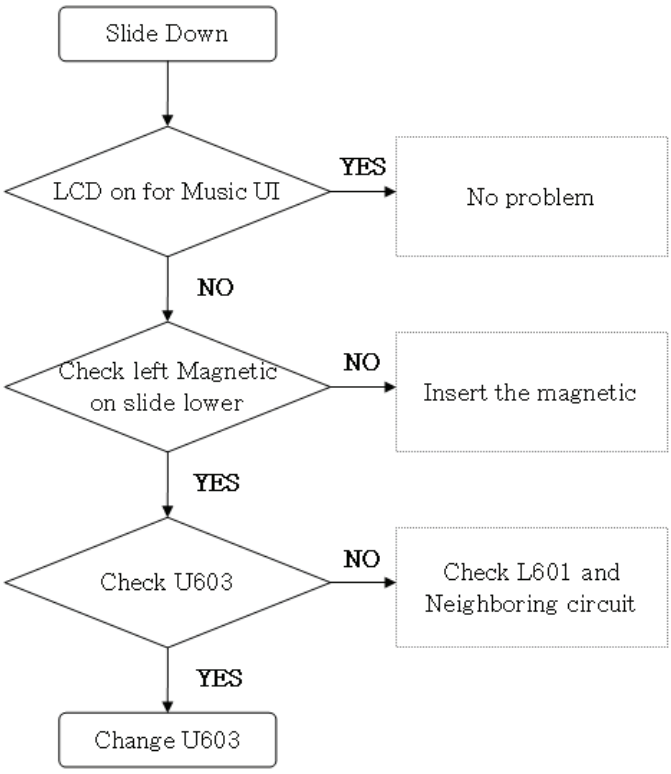

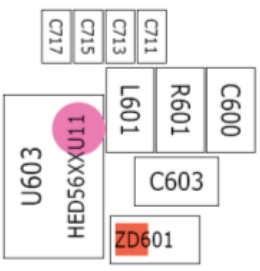

SAMSUNG Proprietary-Contents may change without notice
This Document can not be used without Samsung's authorization

9-12. WCDMA TX

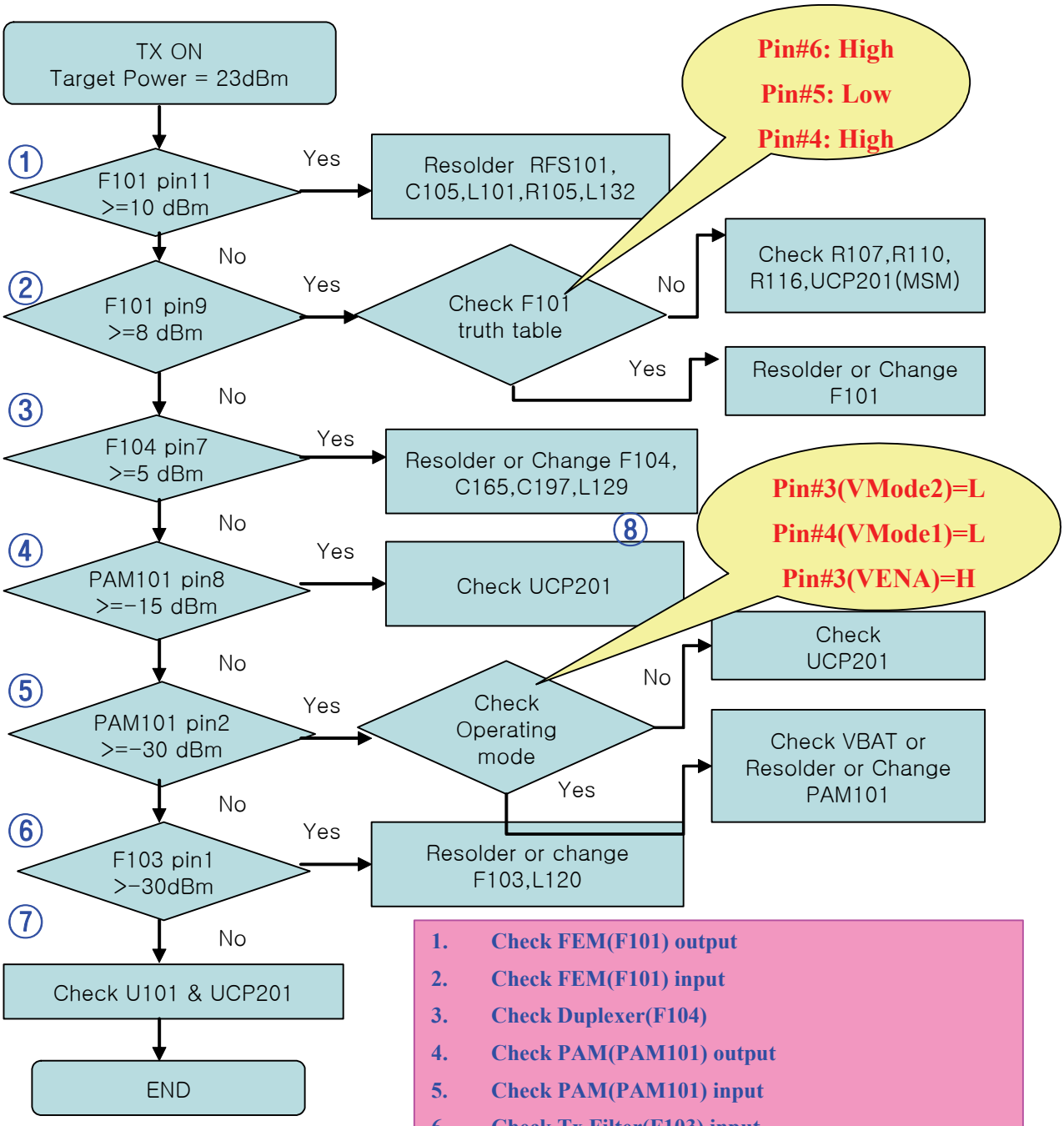

1. Check FEM(F101) output
2. Check FEM(F101) input
3. Check Duplexer(F104)
4. Check PAM(PAM101) output
5. Check PAM(PAM101) input
6. Check Tx Filter(F103) input
7. Check RTR6275(U101), MSM6260(UCP201)

SAMSUNG Proprietary-Contents may change without notice
This Document can not be used without Samsung's authorization

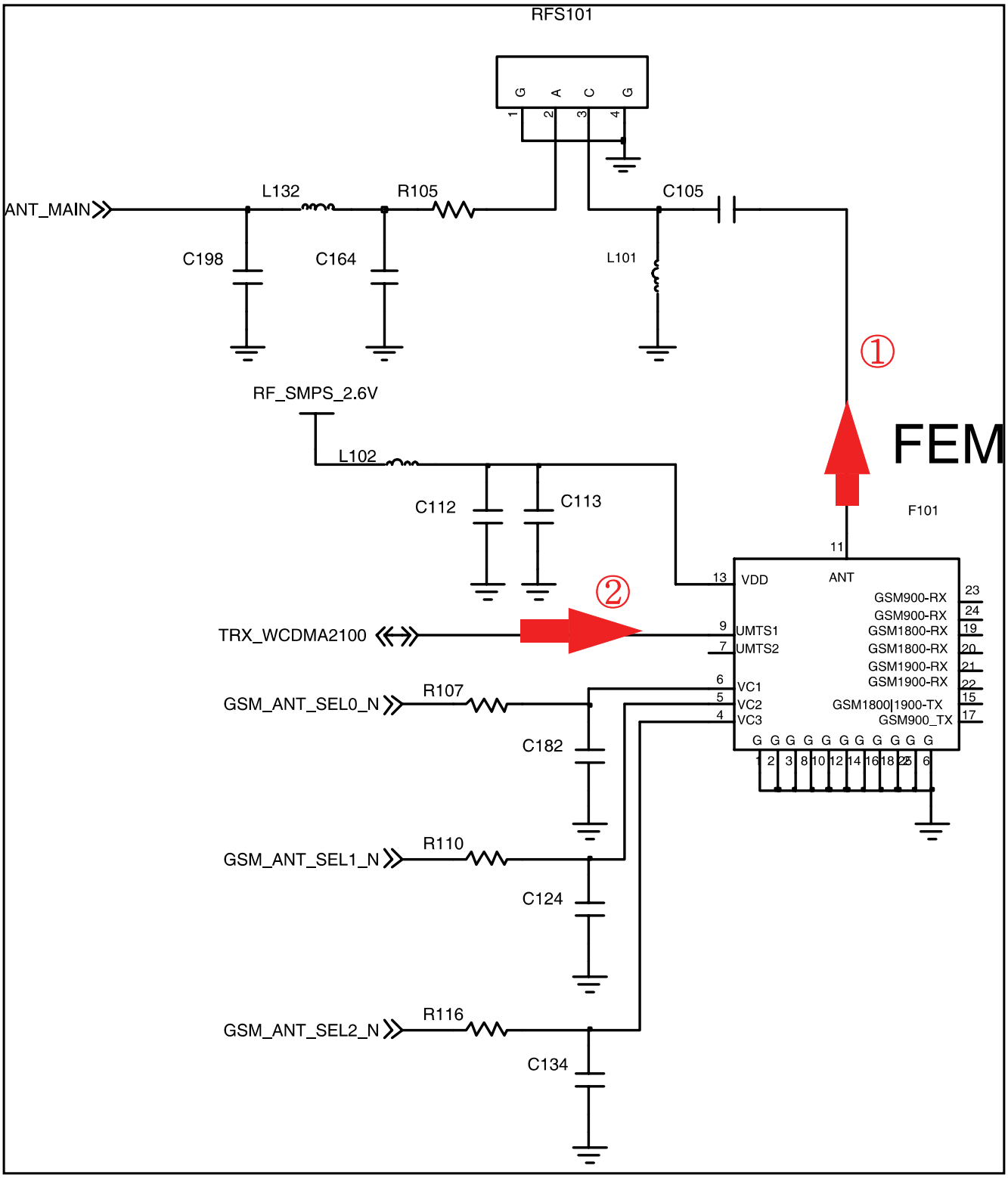

SAMSUNG Proprietary-Contents may change without notice
This Document can not be used without Samsung's authorization

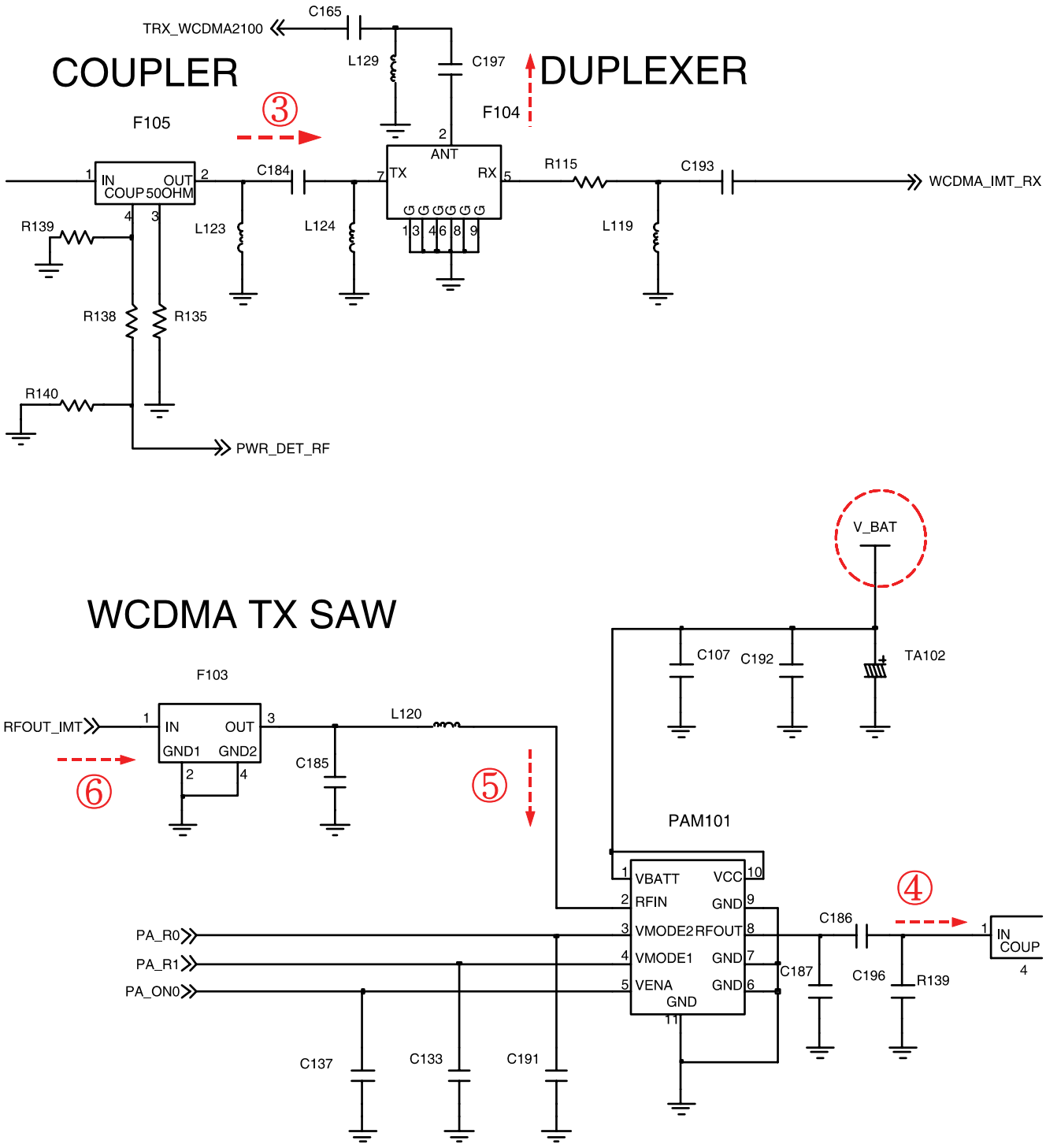

SAMSUNG Proprietary-Contents may change without notice
This Document can not be used without Samsung's authorization

9-13. WCDMA RX

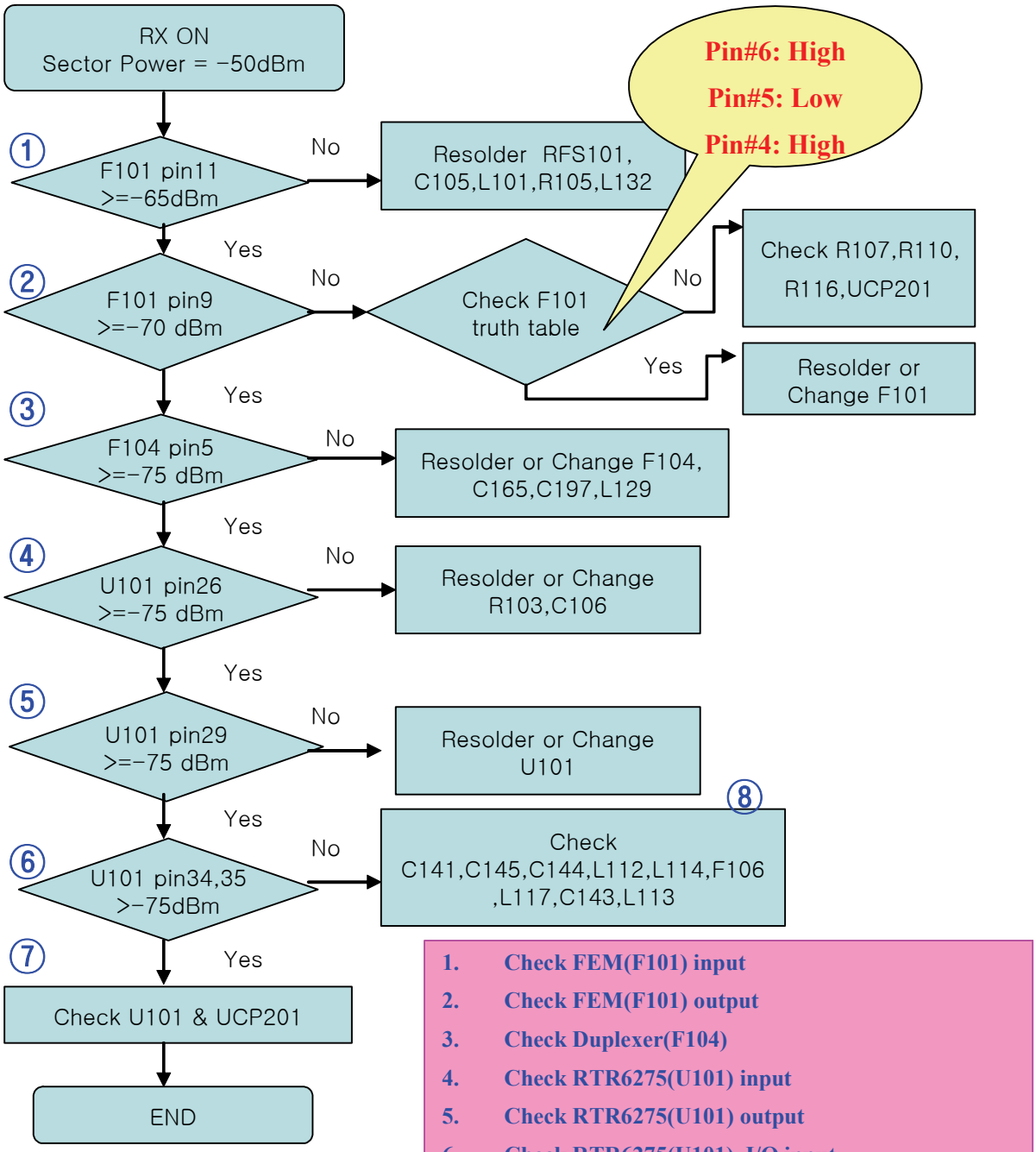

SAMSUNG Proprietary-Contents may change without notice
This Document can not be used without Samsung's authorization

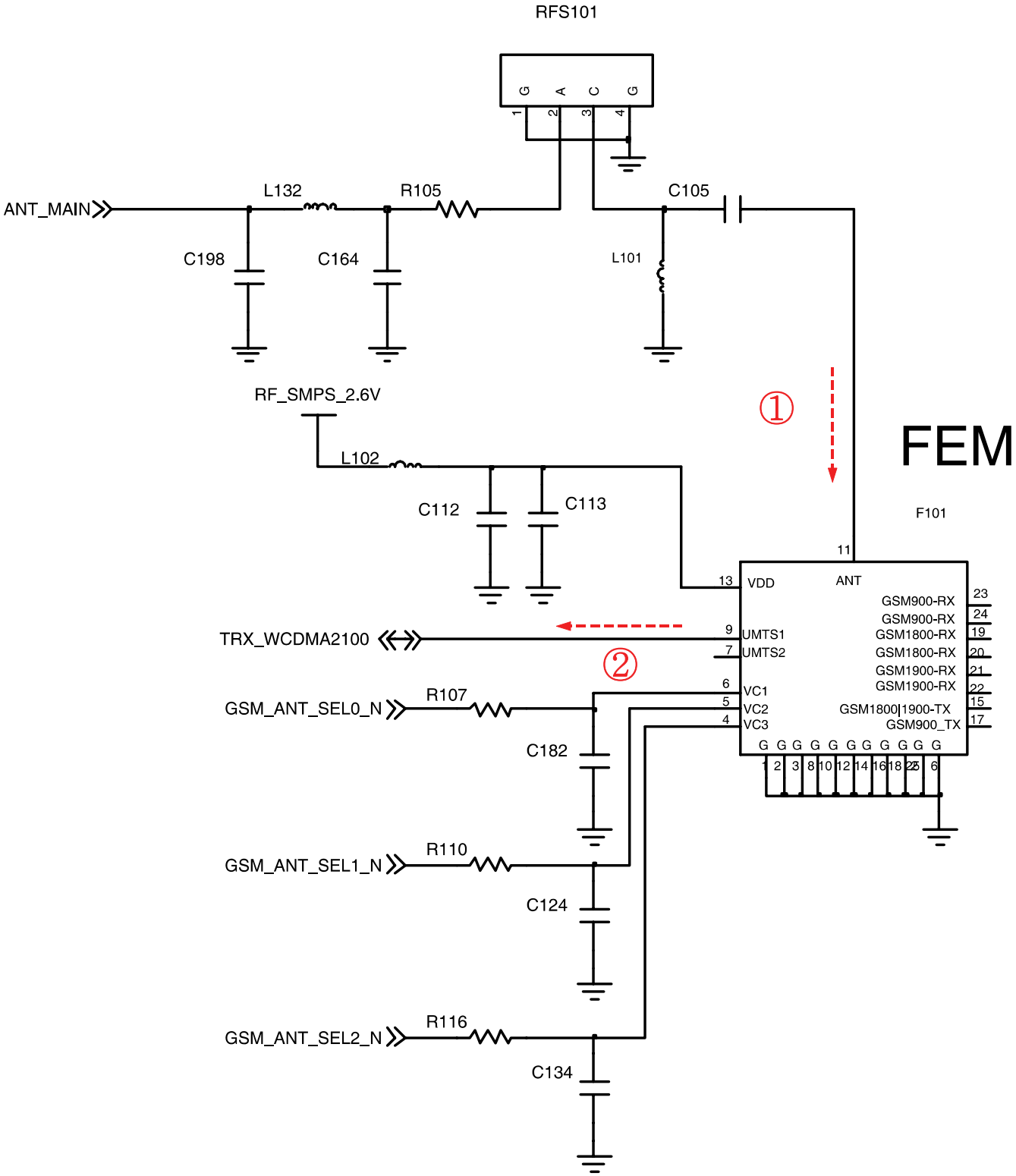

SAMSUNG Proprietary-Contents may change without notice
This Document can not be used without Samsung's authorization

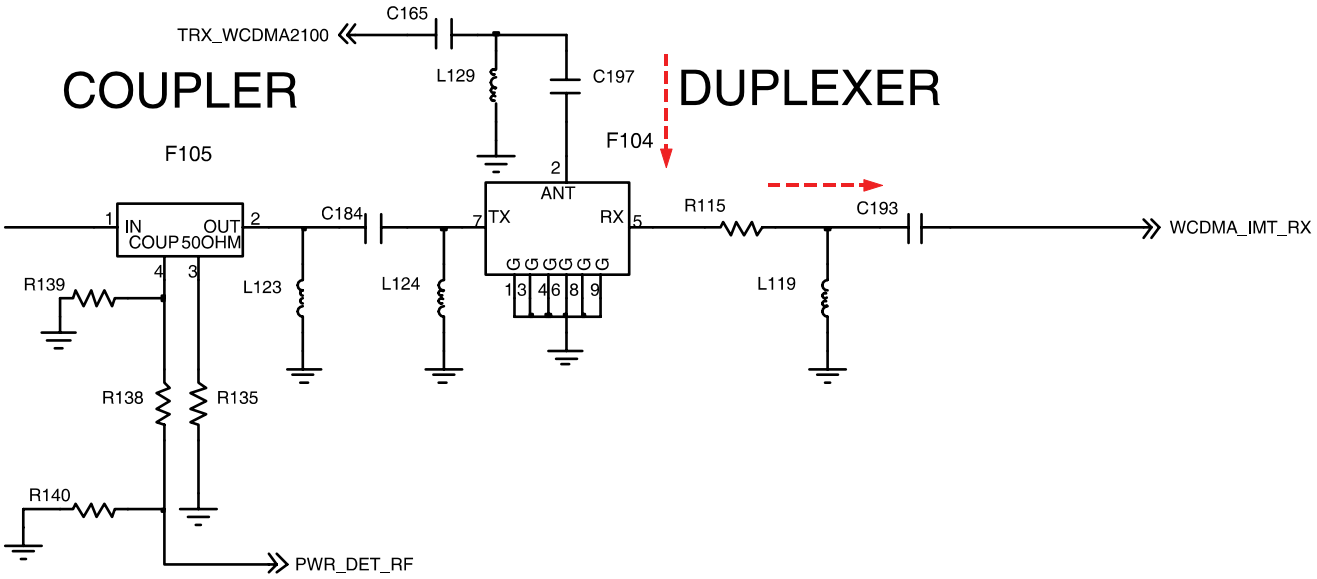

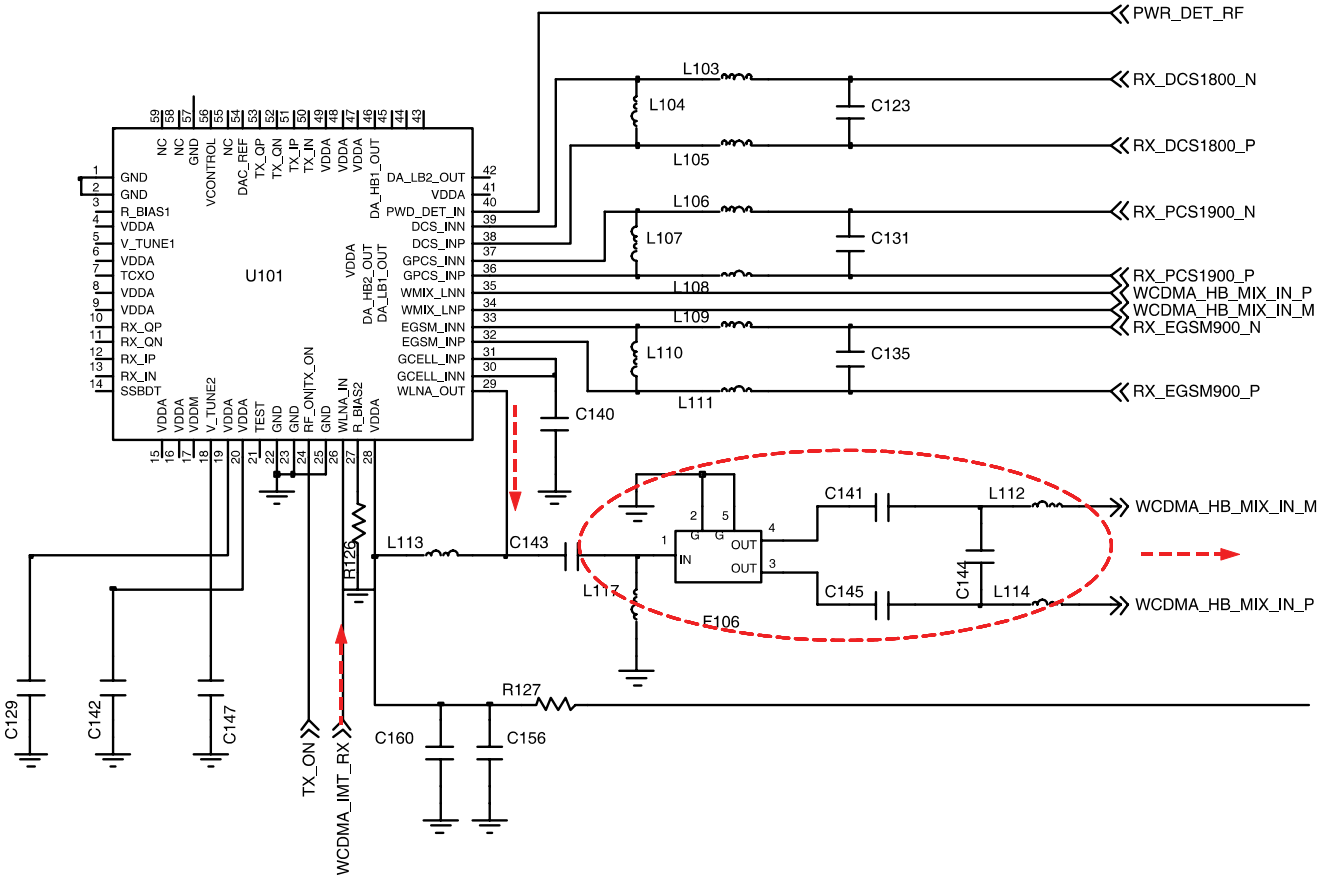

SAMSUNG Proprietary-Contents may change without notice
This Document can not be used without Samsung's authorization

9-14. EGSM TX

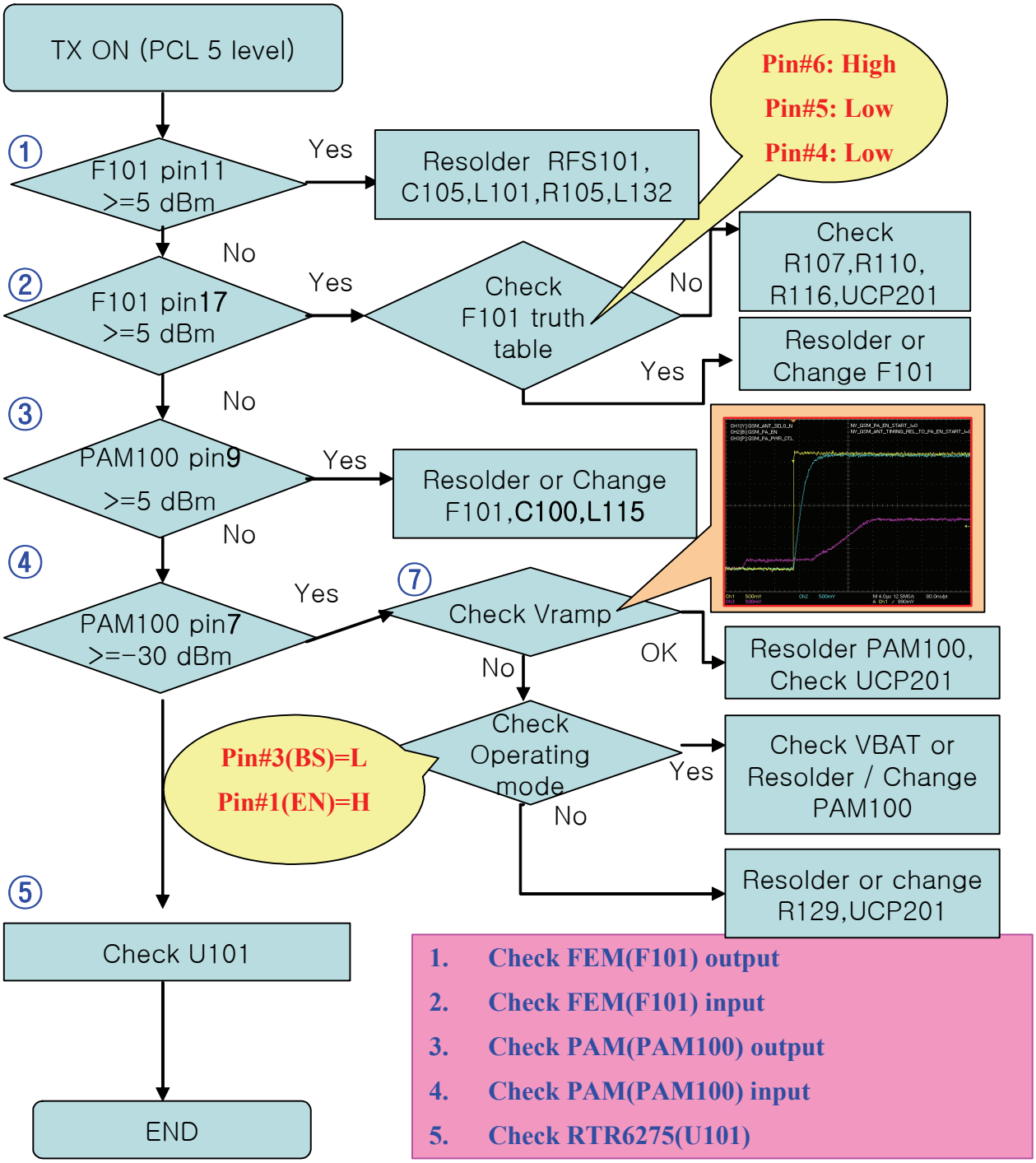

SAMSUNG Proprietary-Contents may change without notice
This Document can not be used without Samsung's authorization

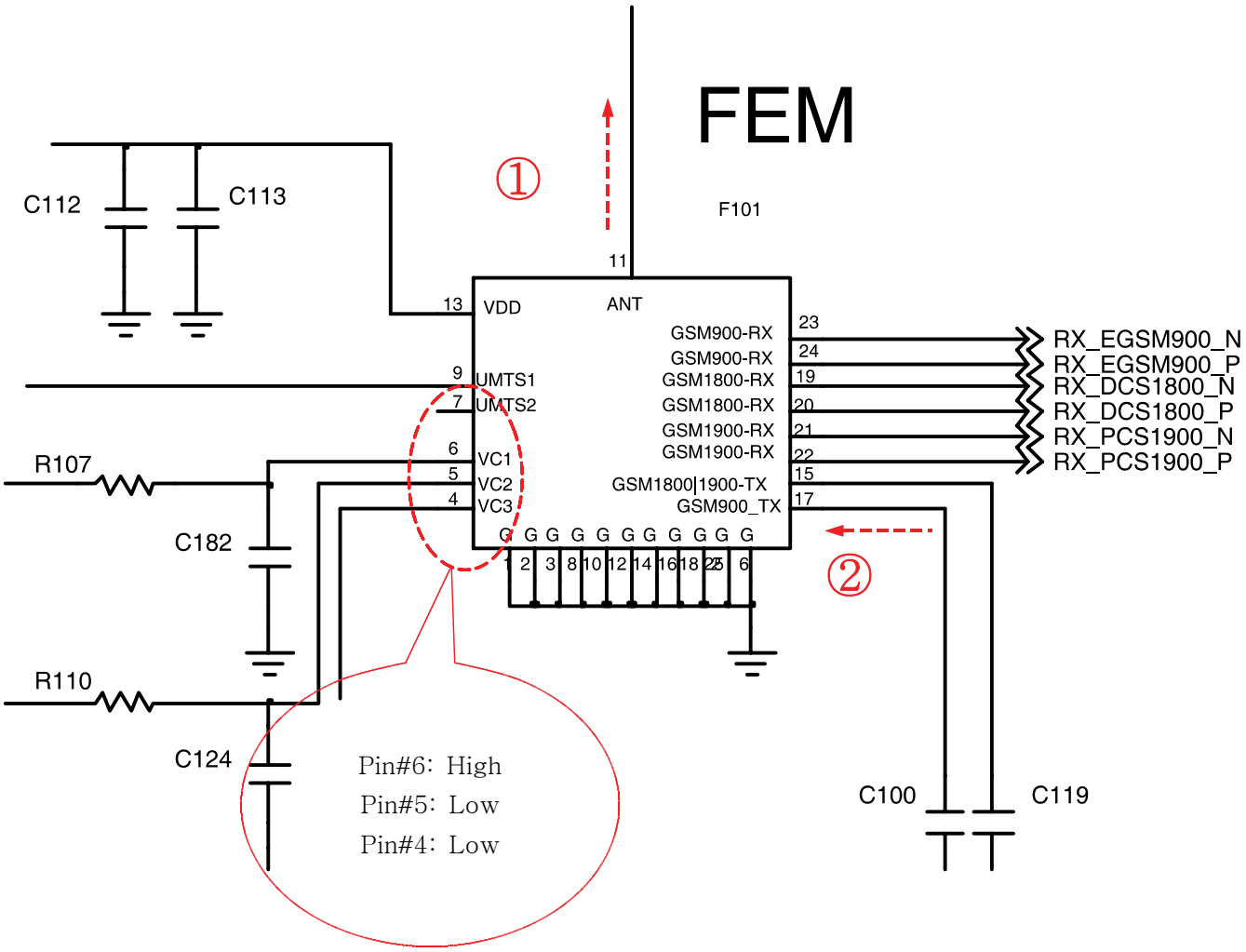

SAMSUNG Proprietary-Contents may change without notice
This Document can not be used without Samsung's authorization

GSM PAM

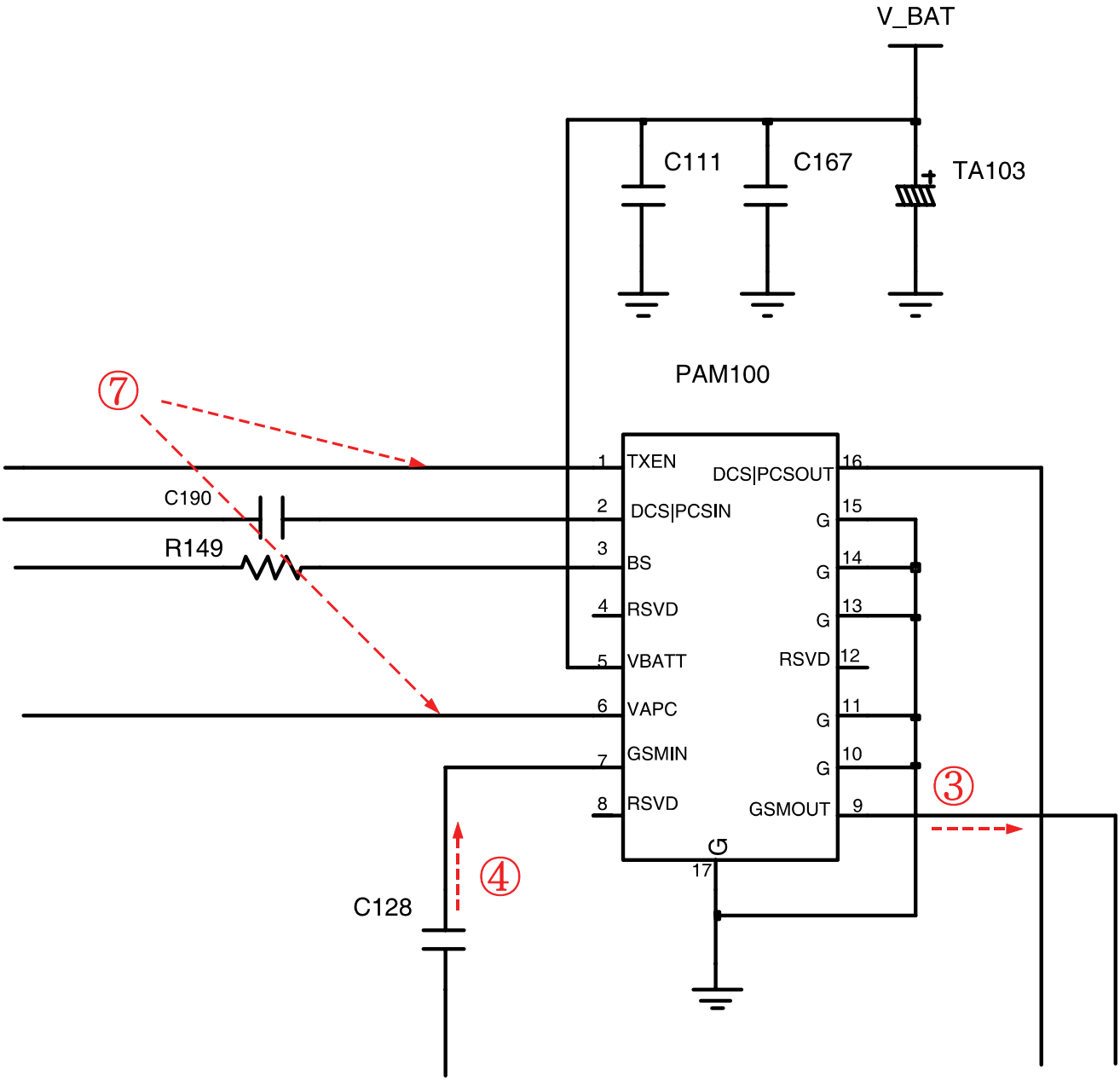

SAMSUNG Proprietary-Contents may change without notice
This Document can not be used without Samsung's authorization

⑦

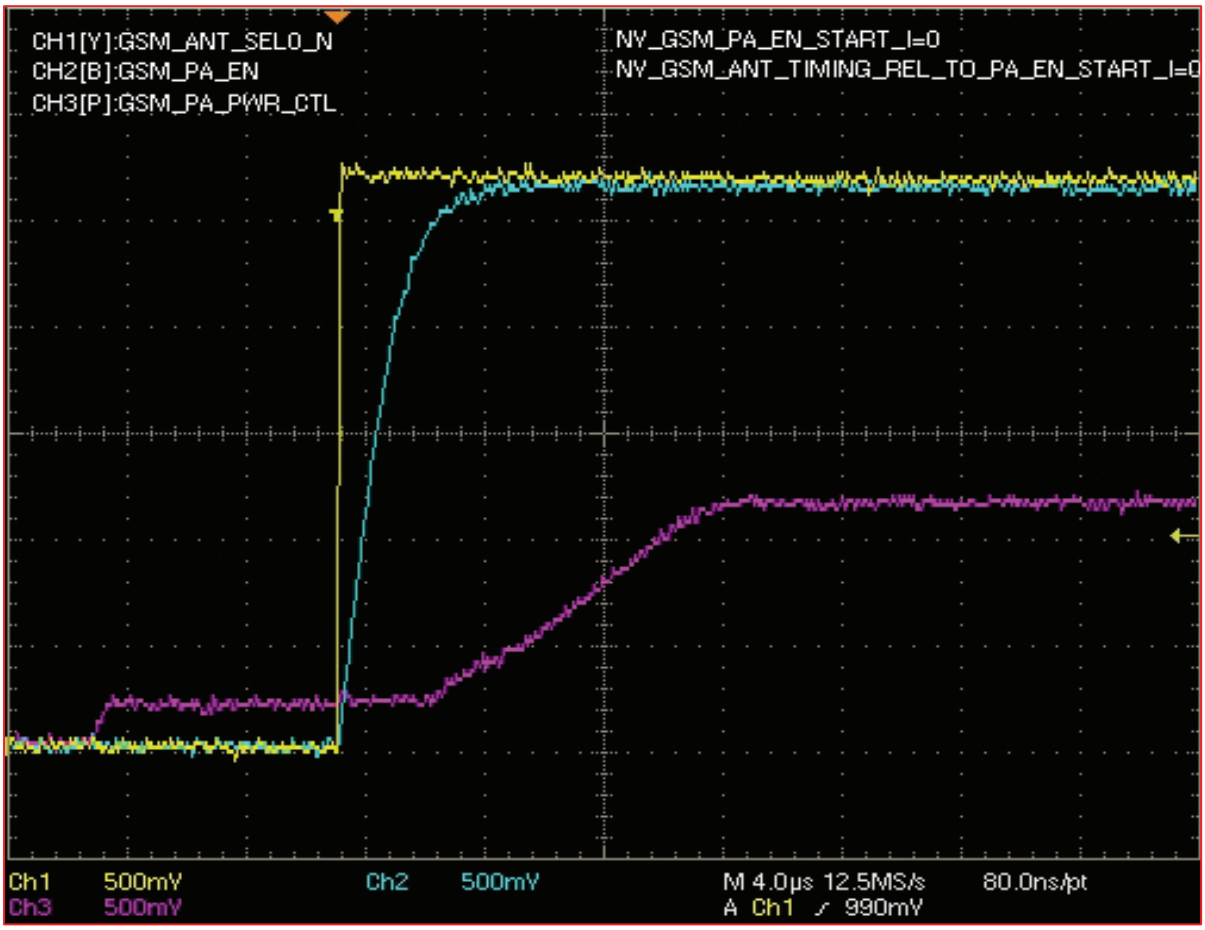

SAMSUNG Proprietary-Contents may change without notice
This Document can not be used without Samsung's authorization

9-15. DCS/PCS TX

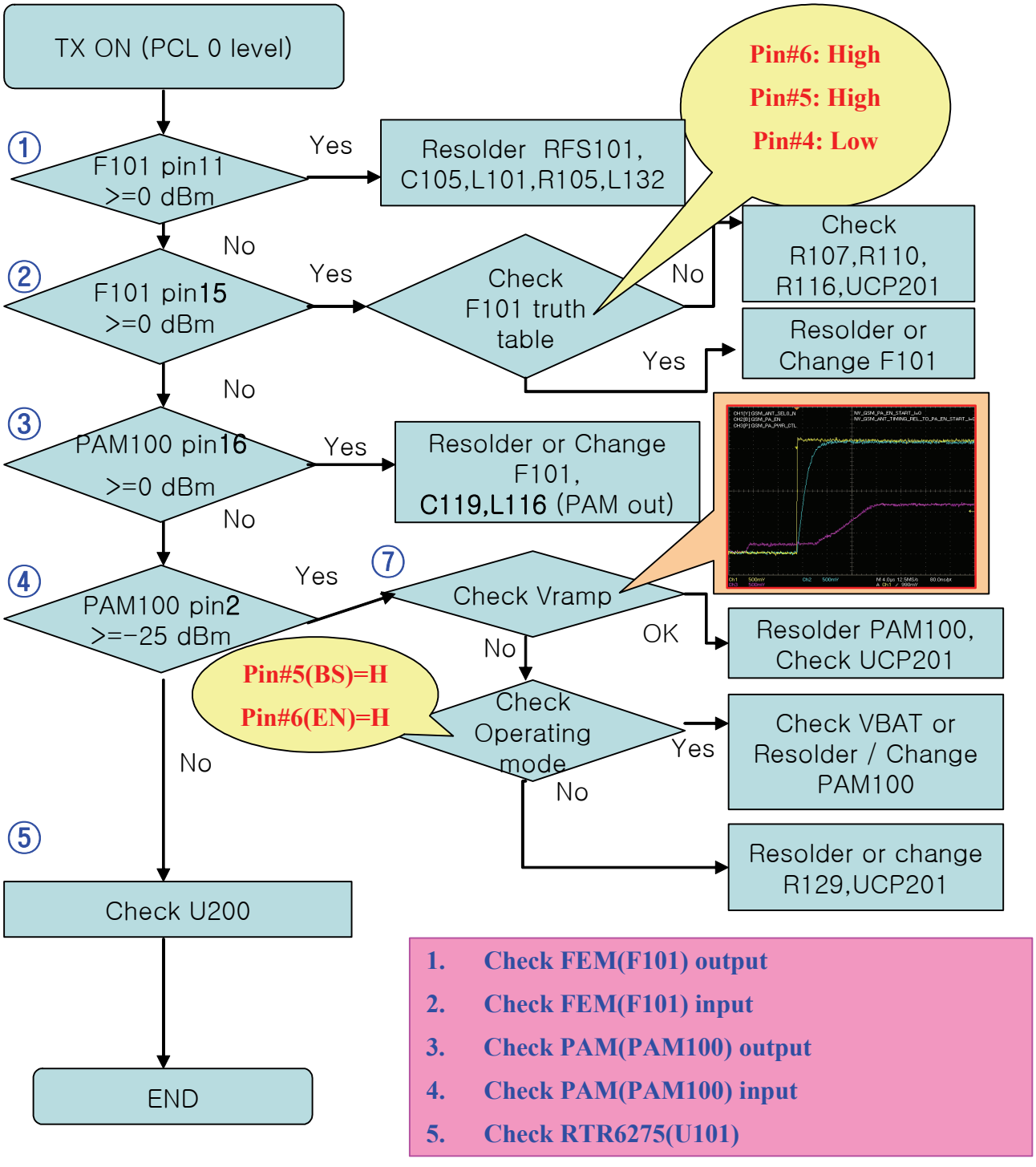

SAMSUNG Proprietary-Contents may change without notice
This Document can not be used without Samsung's authorization

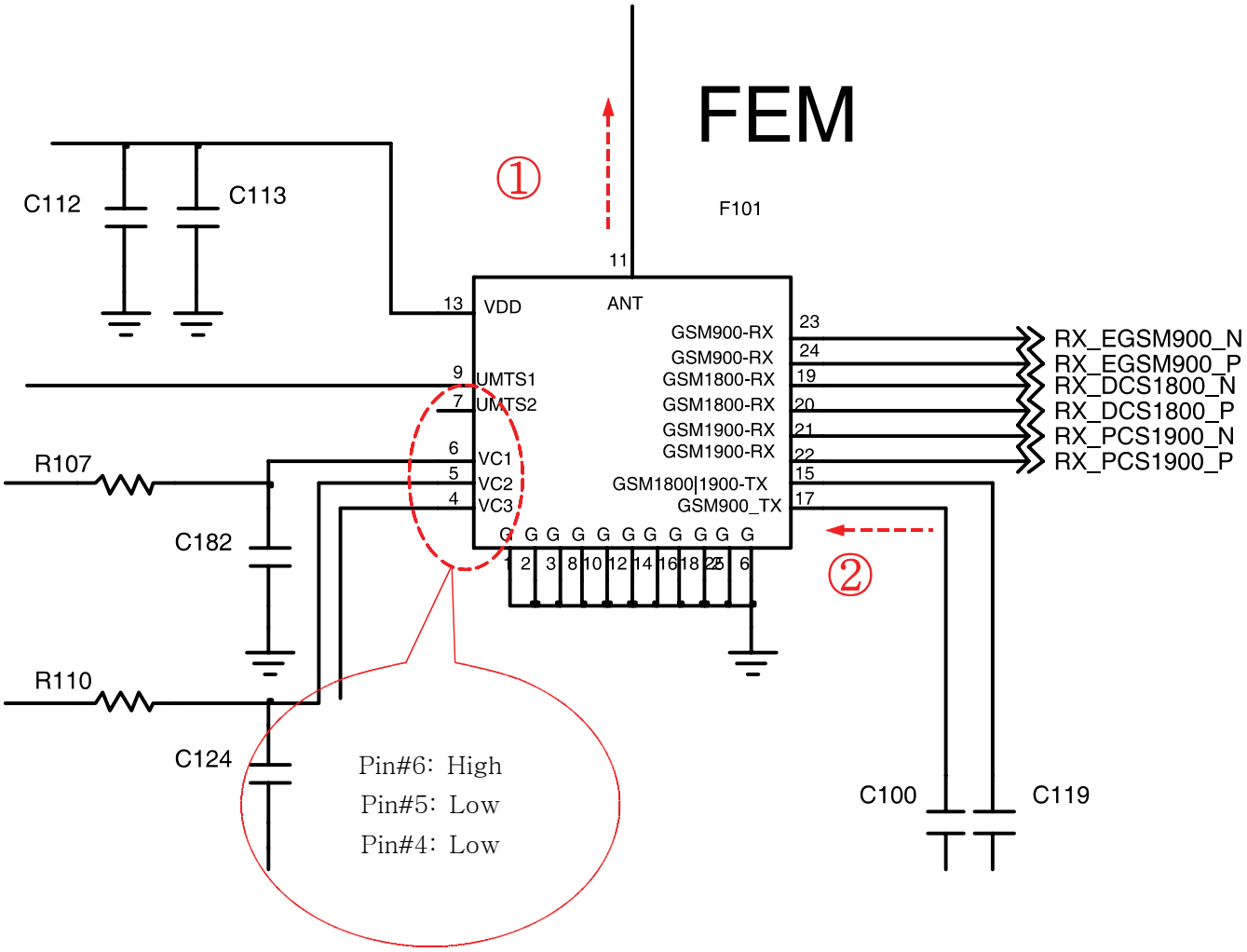

SAMSUNG Proprietary-Contents may change without notice
This Document can not be used without Samsung's authorization

GSM PAM

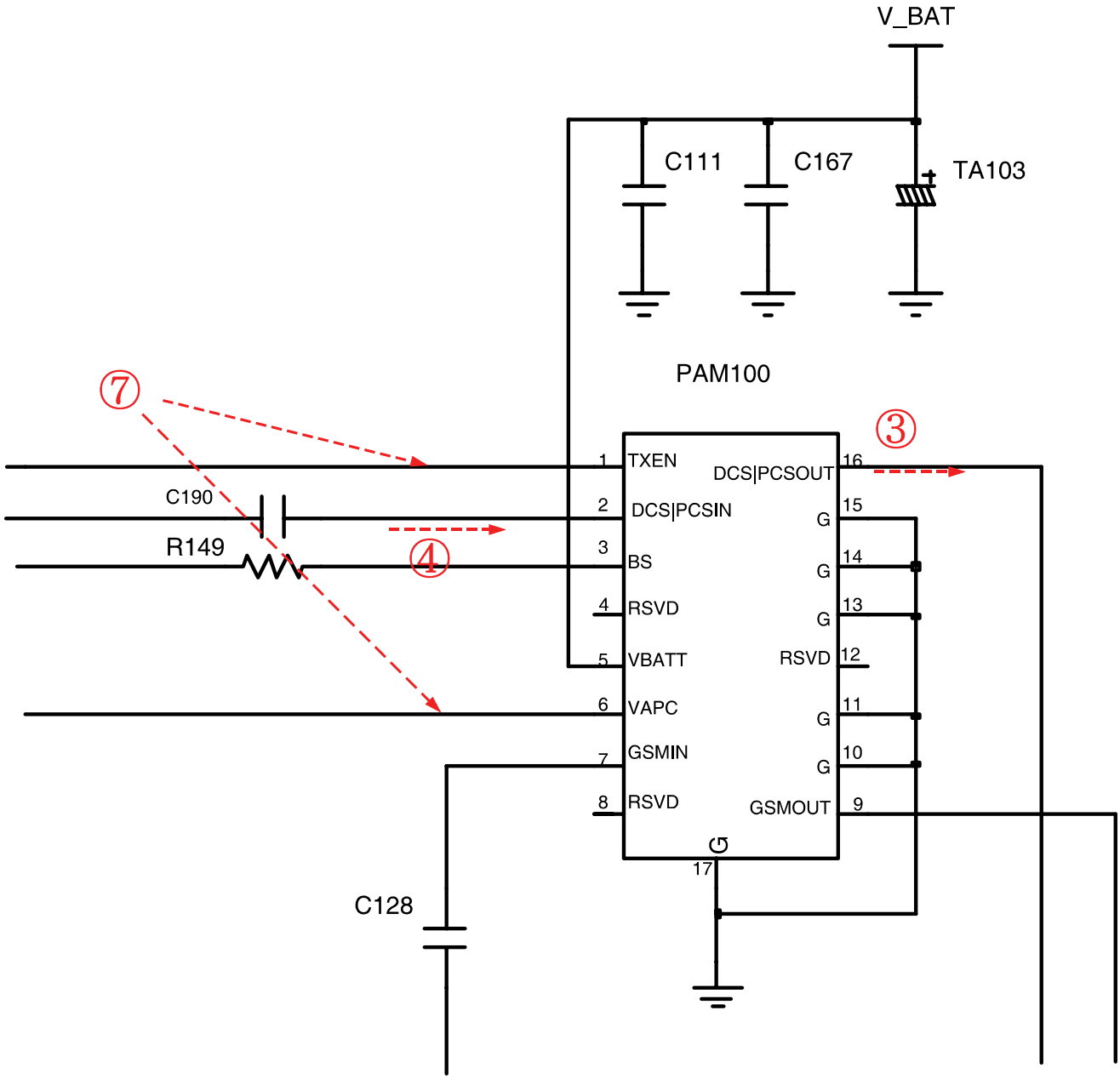

SAMSUNG Proprietary-Contents may change without notice
This Document can not be used without Samsung's authorization

⑦

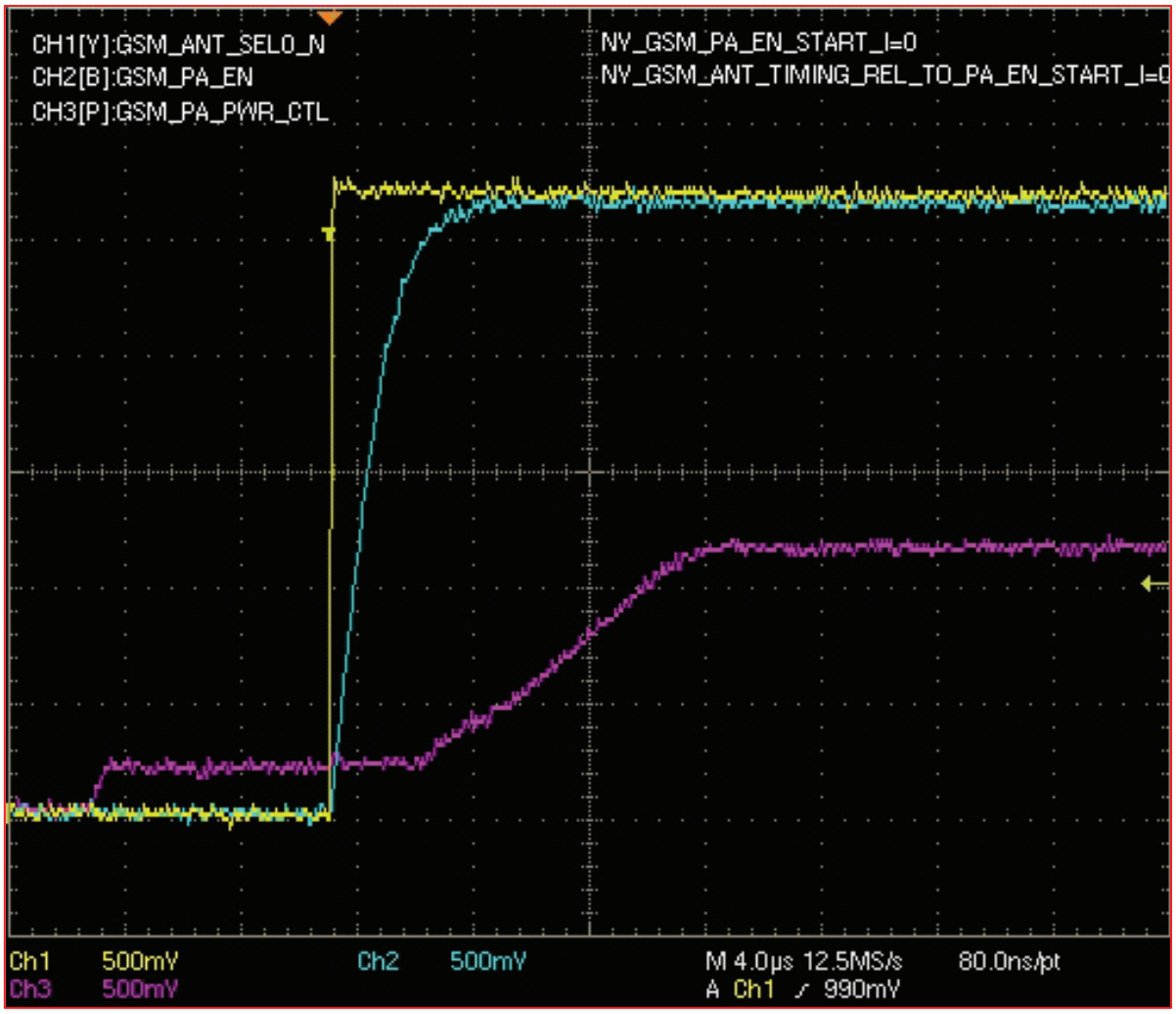

SAMSUNG Proprietary-Contents may change without notice
This Document can not be used without Samsung's authorization

9-16. EGSM RX

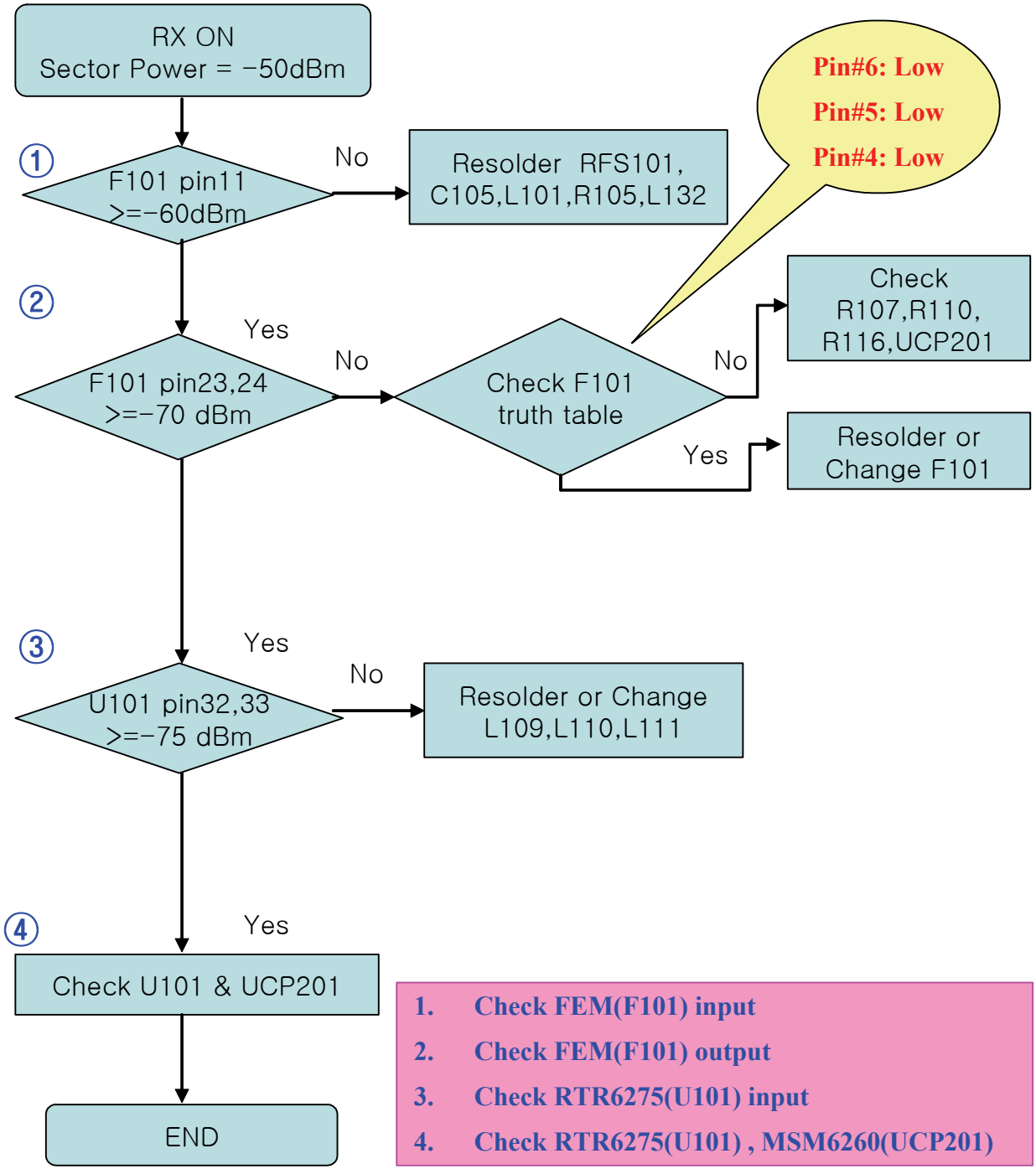

SAMSUNG Proprietary-Contents may change without notice
This Document can not be used without Samsung's authorization

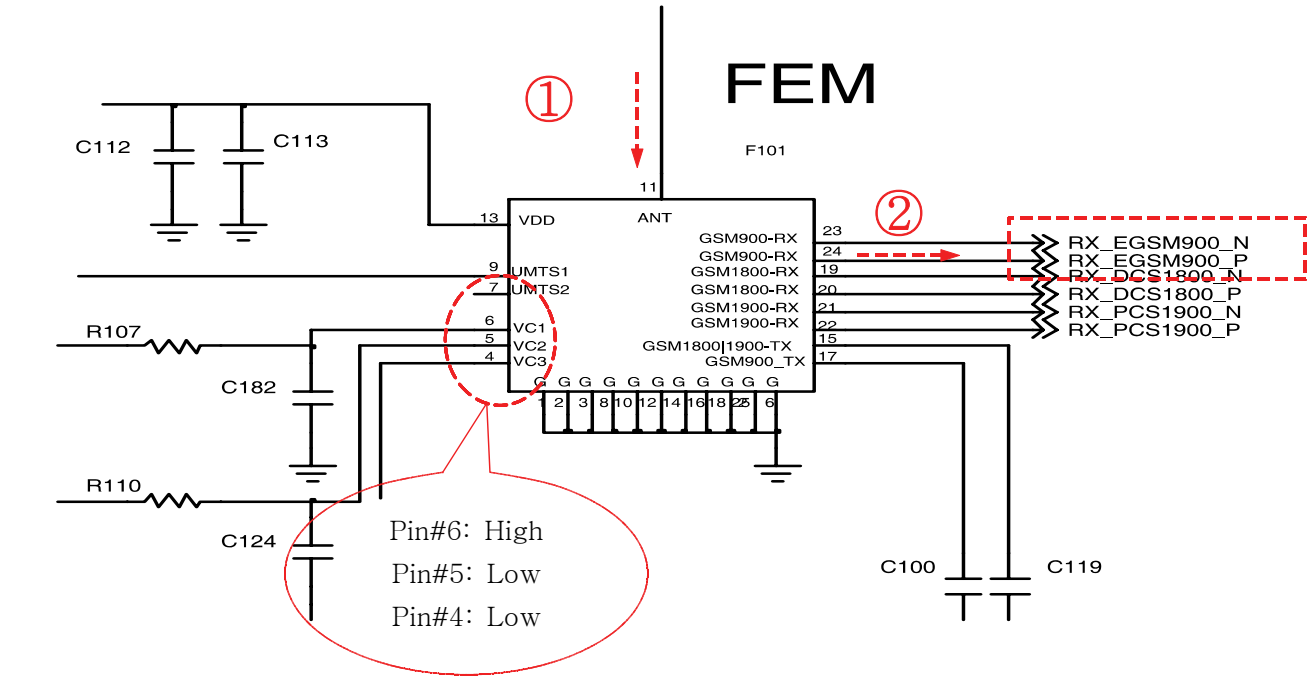

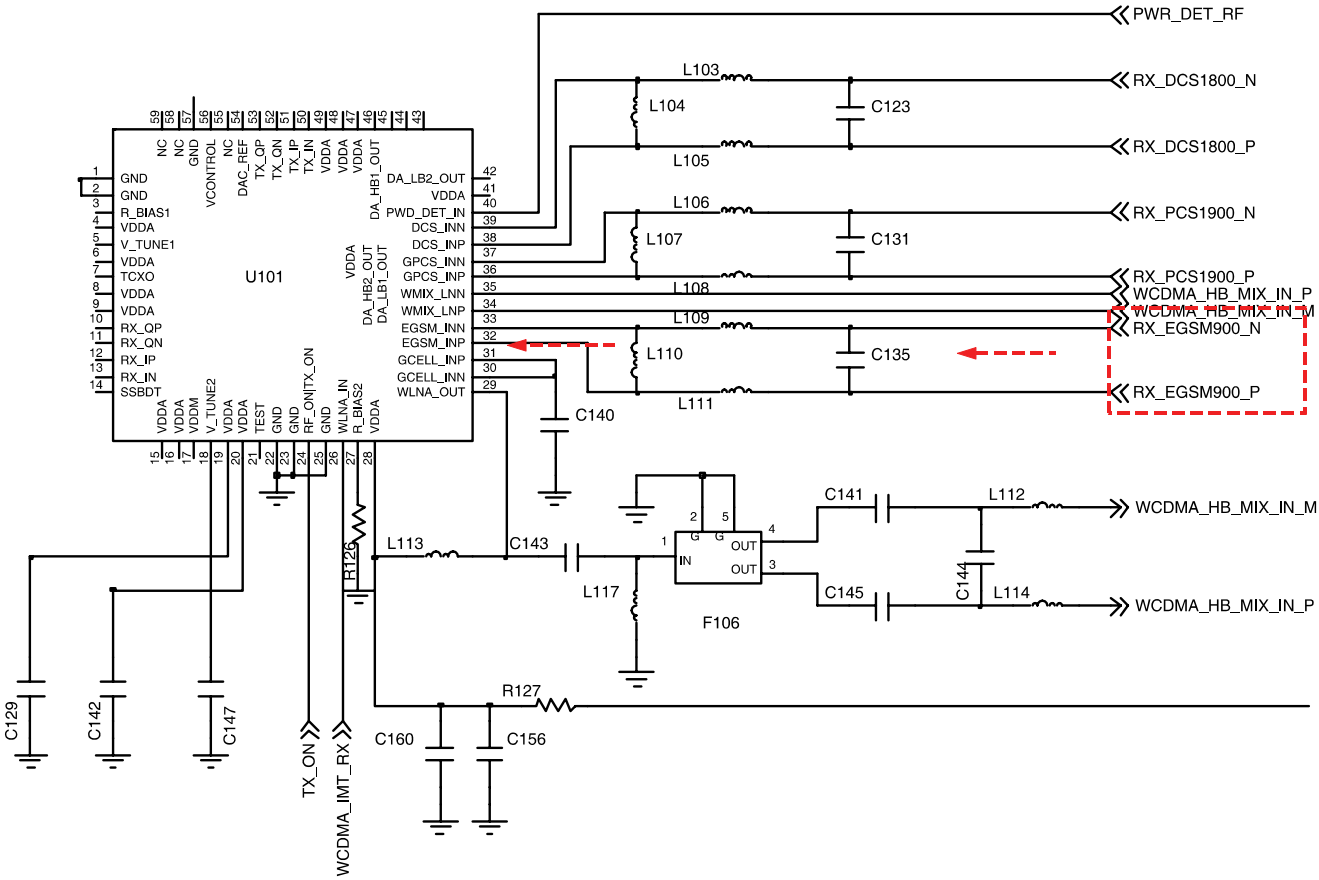

SAMSUNG Proprietary-Contents may change without notice
This Document can not be used without Samsung's authorization

9-17. DCS RX

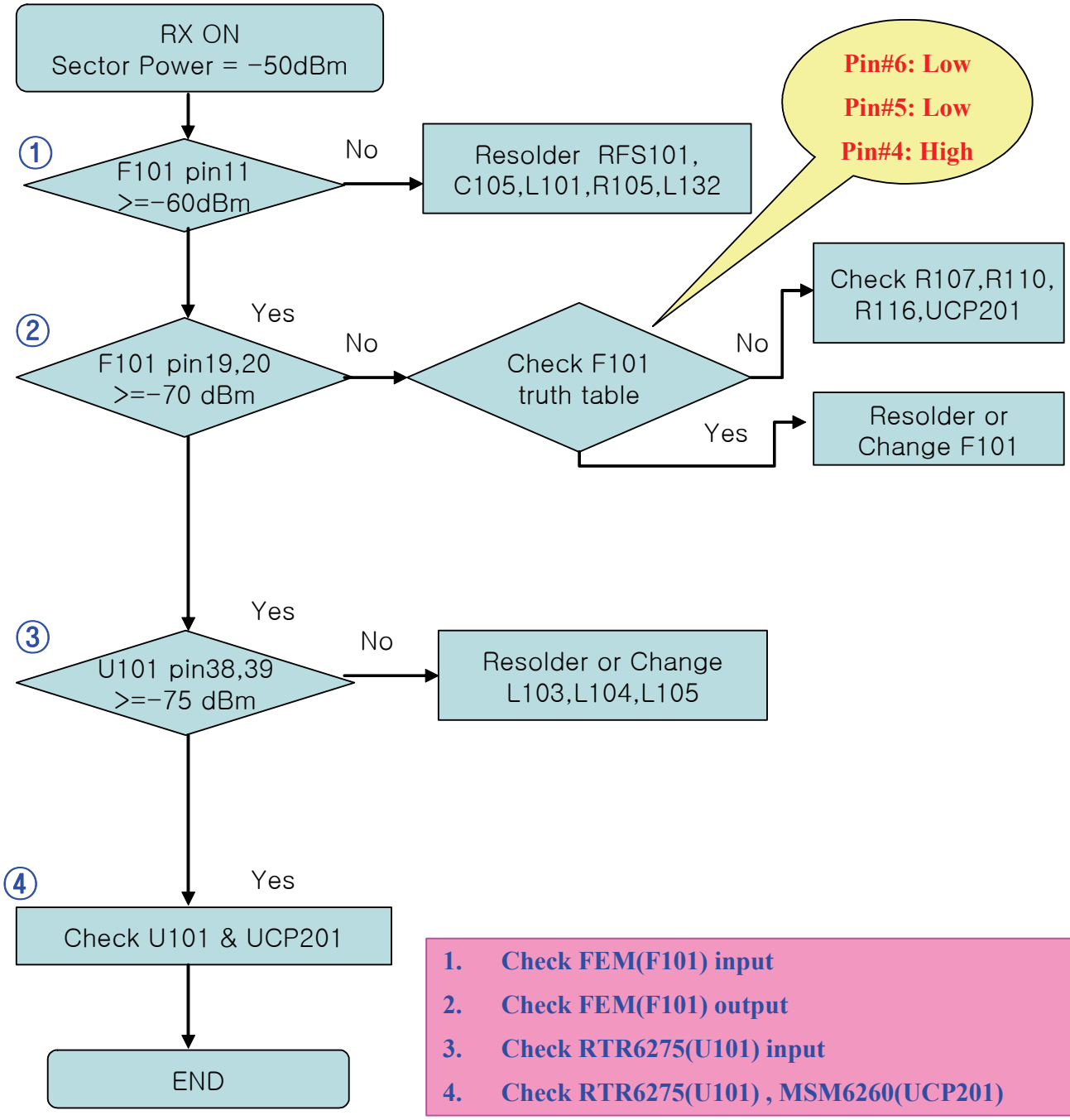

1. Check FEM(F101) input
2. Check FEM(F101) output
3. Check RTR6275(U101) input
4. Check RTR6275(U101) , MSM6260(UCP201)

SAMSUNG Proprietary-Contents may change without notice
This Document can not be used without Samsung's authorization

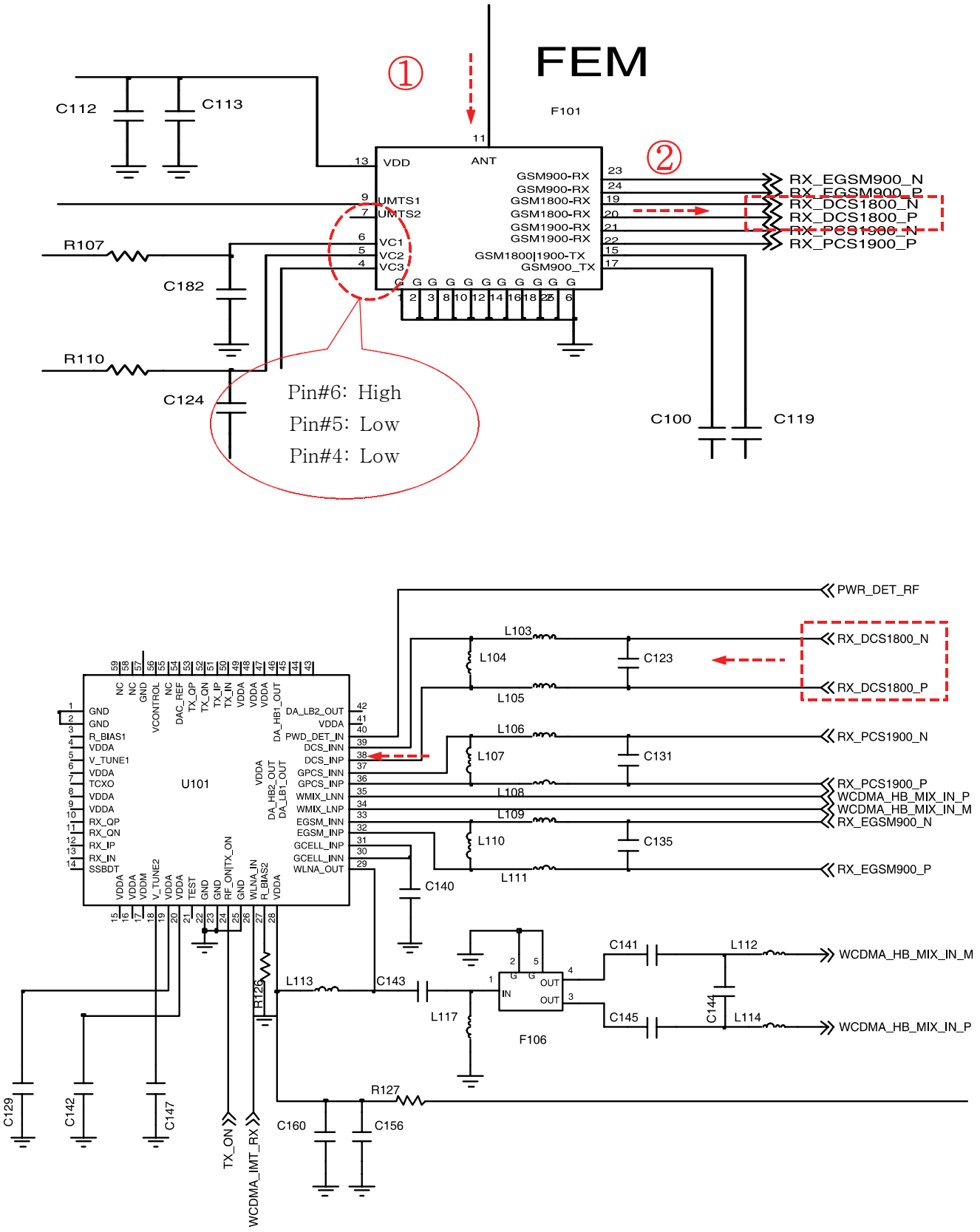

SAMSUNG Proprietary-Contents may change without notice
This Document can not be used without Samsung's authorization

9-18. PCS RX

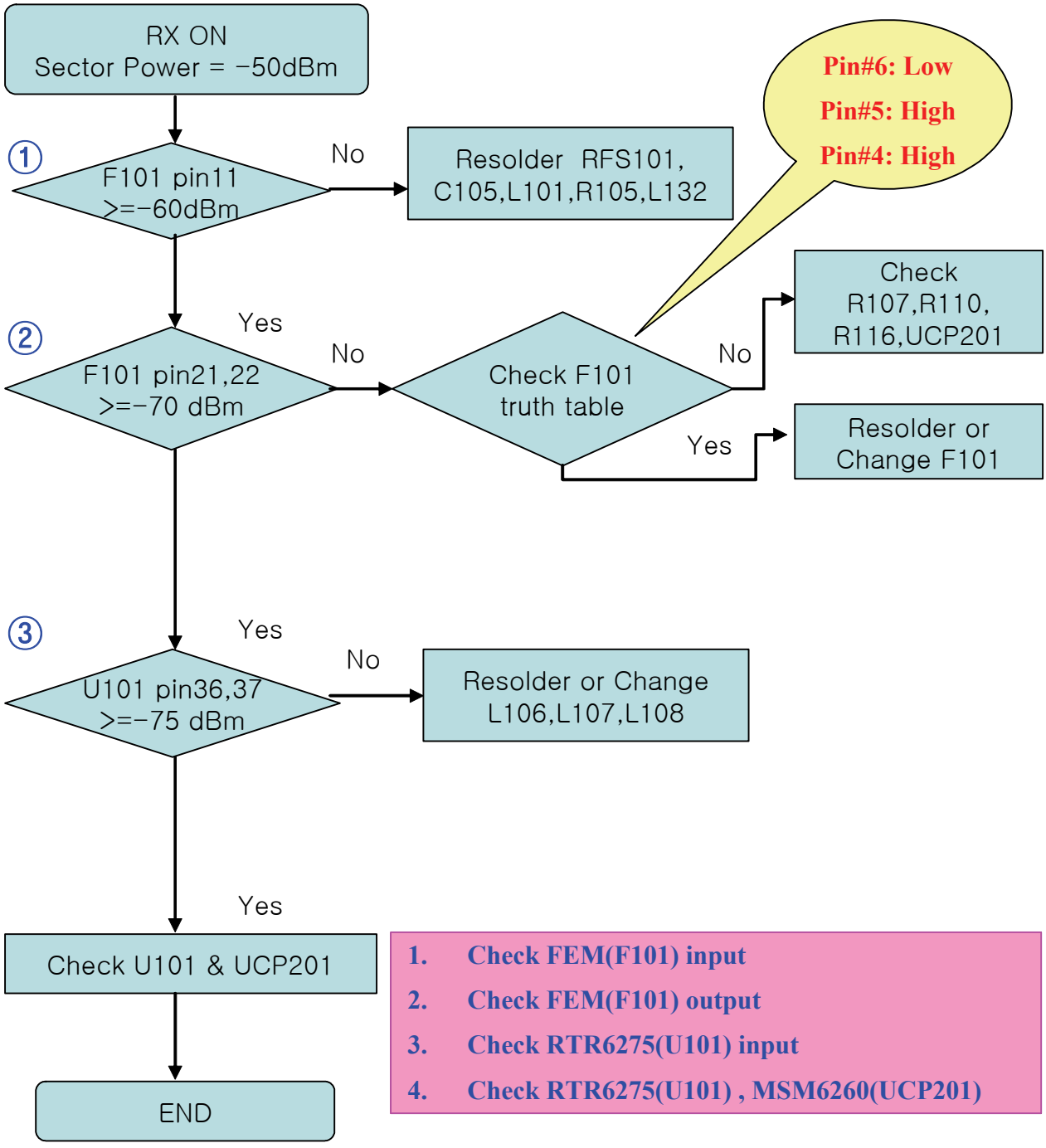

SAMSUNG Proprietary-Contents may change without notice
This Document can not be used without Samsung's authorization

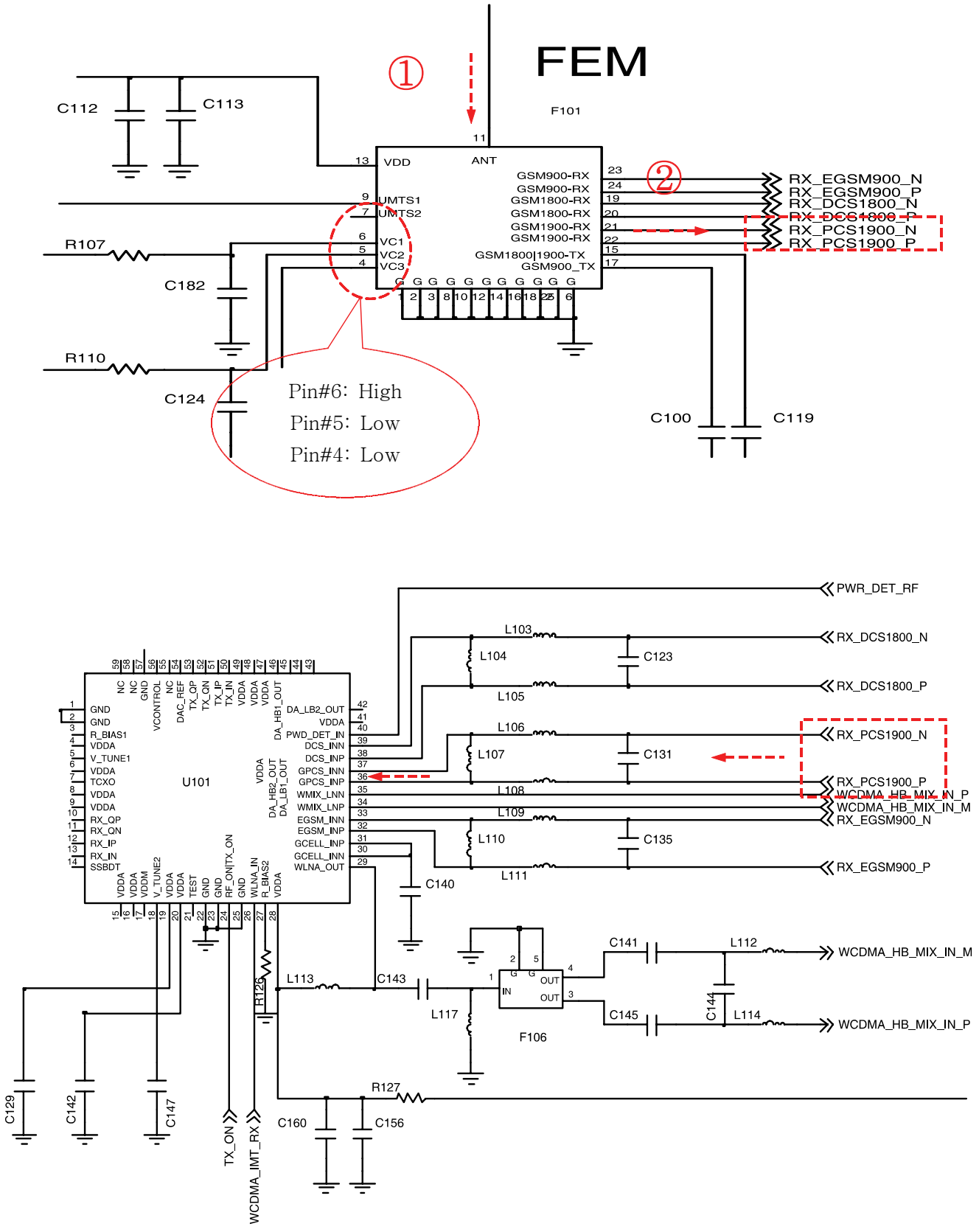

SAMSUNG Proprietary-Contents may change without notice
This Document can not be used without Samsung's authorization

SAMSUNG Proprietary-Contents may change without notice
This Document can not be used without Samsung's authorization

10. Reference data

Reference Abbreviate

- **AAC**: Advanced Audio Coding.
- **AVC** : Advanced Video Coding.
- **BER** : Bit Error Rate
- **BPSK**: Binary Phase Shift Keying
- **CA** : Conditional Access
- **CDM** : Code Division Multiplexing
- **C/I** : Carrier to Interference
- **DMB** : Digital Multimedia Broadcasting
- **EN :** European Standard
- **ES :** Elementary Stream
- **ETSI**: European Telecommunications Standards Institute
- **MPEG**: Moving Picture Experts Group
- **PN** : Pseudo-random Noise
- **PS** : Pilot Symbol
- **QPSK**: Quadrature Phase Shift Keying
- **RS** : Reed-Solomon
- **SI** : Service Information
- **TDM** : Time Division Multiplexing
- **TS :** Transport Stream

SAMSUNG Proprietary-Contents may change without notice
This Document can not be used without Samsung's authorization

SAMSUNG Proprietary-Contents may change without notice
This Document can not be used without Samsung's authorization

11. Disassembly and Assembly Instructions

11-1. Disassembly Instructions

1

Unscrew five points in the rear cover

2

1) Disjoint rear cover
(Locker should not be in damage)

2) Remove the CAMERA KEY and the VOLUME KEY and POWER KEY

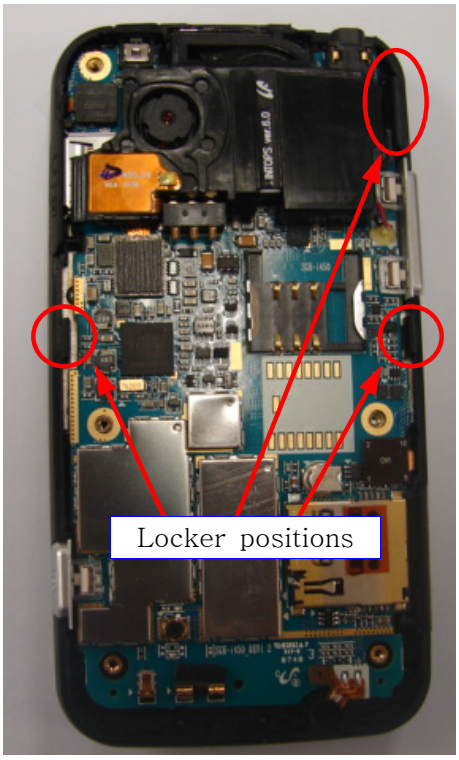

SAMSUNG Proprietary-Contents may change without notice
This Document can not be used without Samsung's authorization

3

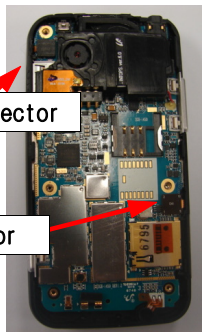

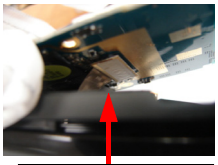

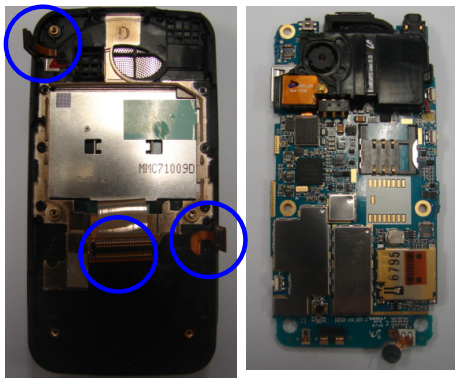

Detach the PBA after removing LCD connector and KEY connector and touch key connector

4

Unscrew six points in the front cover

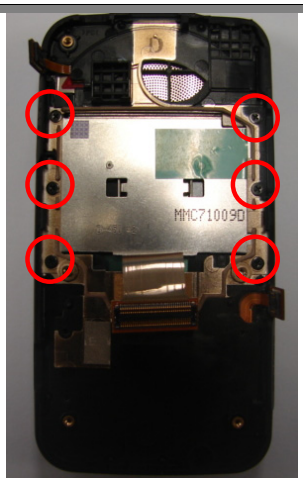

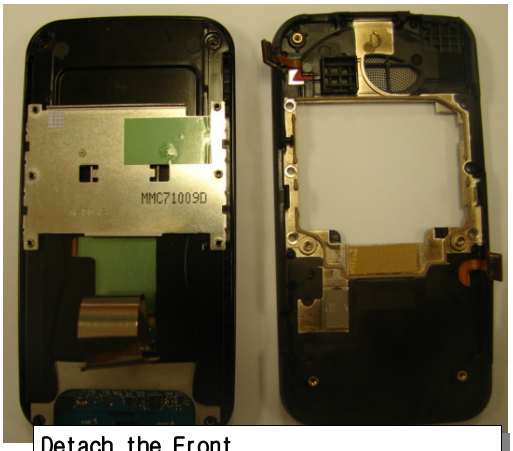

Detach the Front.

5

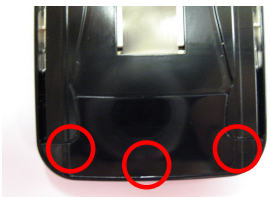

locking position check and disjoint damper

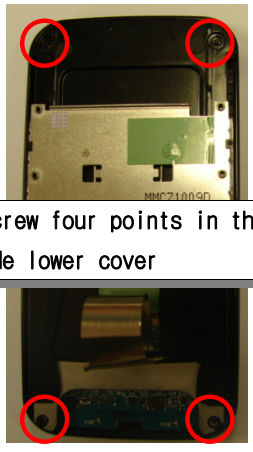

Unscrew four points in the Slide lower cover

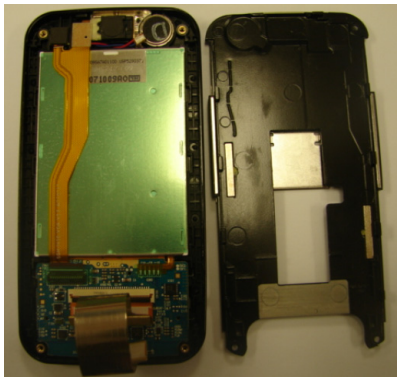

Detach the Lower from the Upper

SAMSUNG Proprietary-Contents may change without notice
This Document can not be used without Samsung's authorization

6

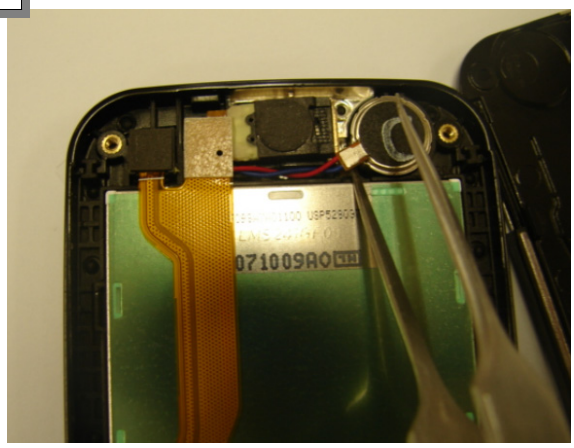

Double-stick in the bottom of motor.
caution.

7

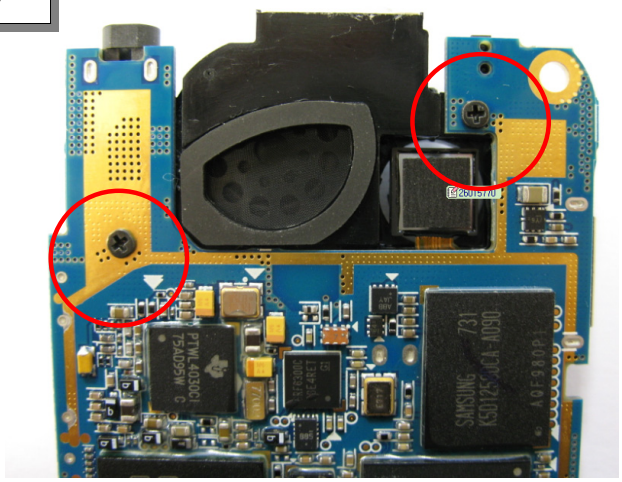

Unscrew two points in the speaker module

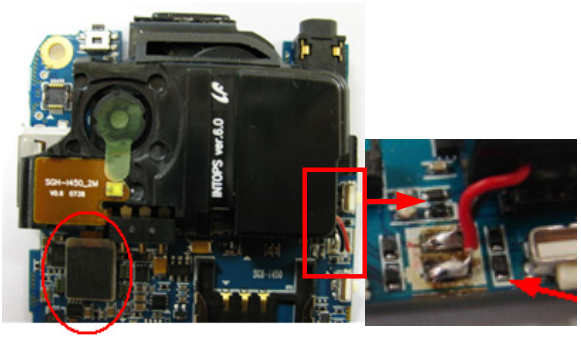

Disjoint 2M Camera connector and remove speaker wire soldering .

SAMSUNG Proprietary-Contents may change without notice
This Document can not be used without Samsung's authorization

11-2. Assembling Manual

1

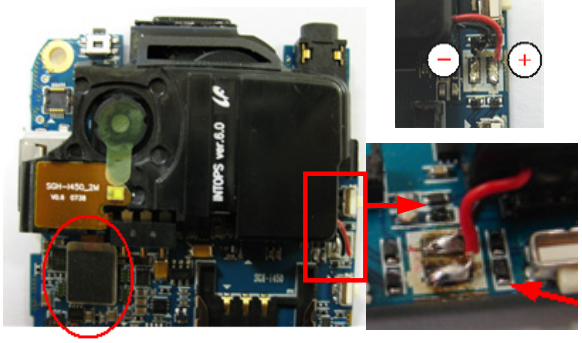

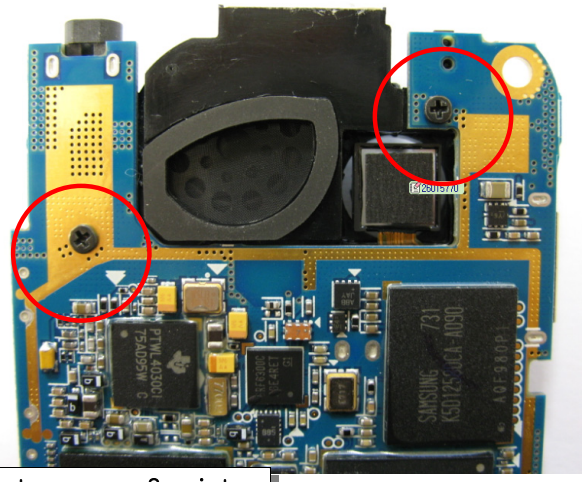

Speaker wire soldering, joint 2M Camera connector, screw 2 points

2

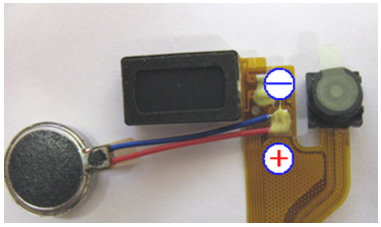

1) Insert the FPCB to the white line.
2) Close the connector locker.

1) Attach the insulating tape.

VGA Camera FPCB soldering

3

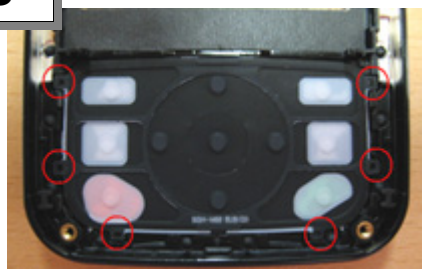

Joint SUB KEYPAD in the Upper case.

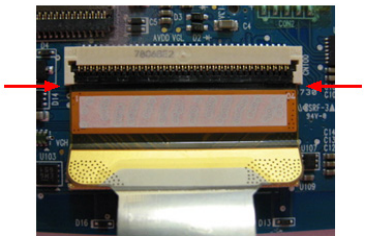

Joint SLIDE FPCB in the connector

Joint LCD module
in the Upper case.

SAMSUNG Proprietary-Contents may change without notice
This Document can not be used without Samsung's authorization

4

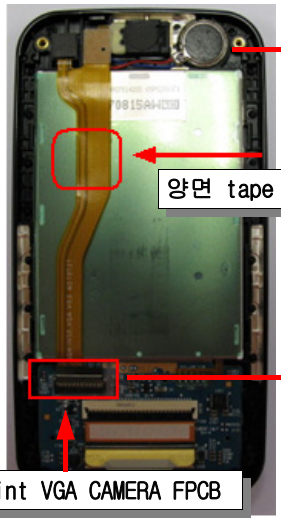

양면 tape 부착

Joint VGA CAMERA FPCB

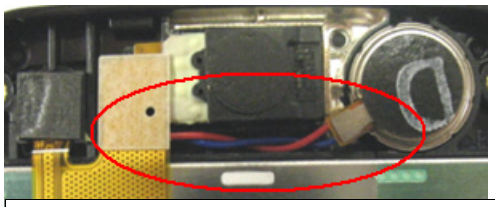

Wire arrangement. Do not over on the LCD module

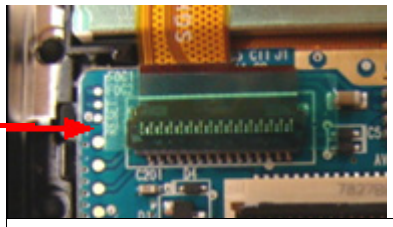

Attach the insulation tape on the CAM FPCB

5

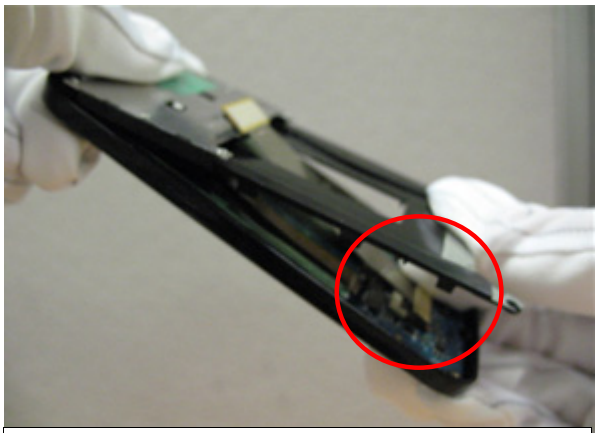

Fold the Slide FPCB in the top direction and joint Lower case

Fist, put the Hook in the upper case and Joint Window. Caution the foreign substance

6

Screw four points Lower case

Joint damper. First, joint both side locker and center locker.

SAMSUNG Proprietary-Contents may change without notice
This Document can not be used without Samsung's authorization

7

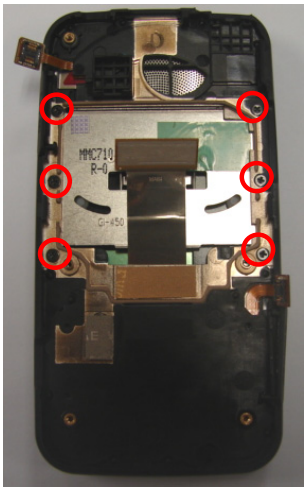

Joint Front cover, Screw six points.

8

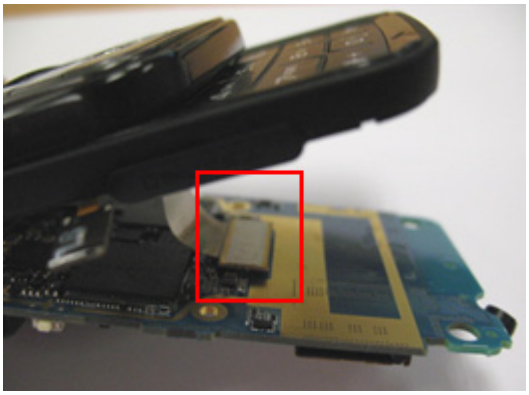

Joint Slide FPCB connector

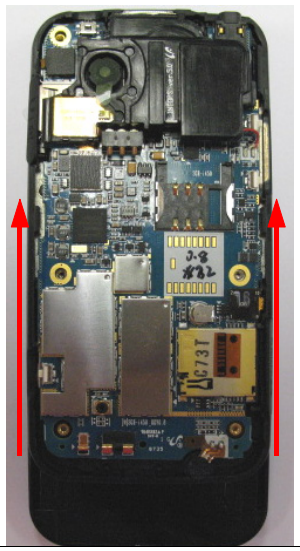

Slide up state, put the PBA in the Front case.

9

Put the Touch Key connector, Key-pad connector and MIC

SAMSUNG Proprietary-Contents may change without notice
This Document can not be used without Samsung's authorization

10

POWER KEY

VOLUME KEY

CAMERA KEY

Put the Power key, Volume key and Camera key.
Be careful the Key direction (Up-Down)

11

First, joint the Rear cover's right-up LOCKER and assemble Rear cover.(in this time, all side cover is open)

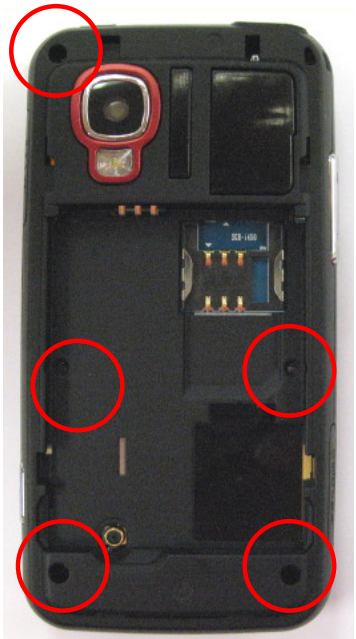

Screw five points in the Rear cover.

SAMSUNG Proprietary-Contents may change without notice
This Document can not be used without Samsung's authorization

SAMSUNG Proprietary-Contents may change without notice
This Document can not be used without Samsung's authorization